Installation, Operation, and Maintenance Manual

IOM 1210-7

Group: **Chiller**

Part Number: **IOM1210-7**

Date: **June 2018**

Supercedes: **April 2018**

Magnitude®
Magnetic Bearing Centrifugal Chillers

Model WMC-D, Model TMC
125 to 400 Tons (440 to 1400 kW)
HFC-134a Refrigerant
50/60 Hz

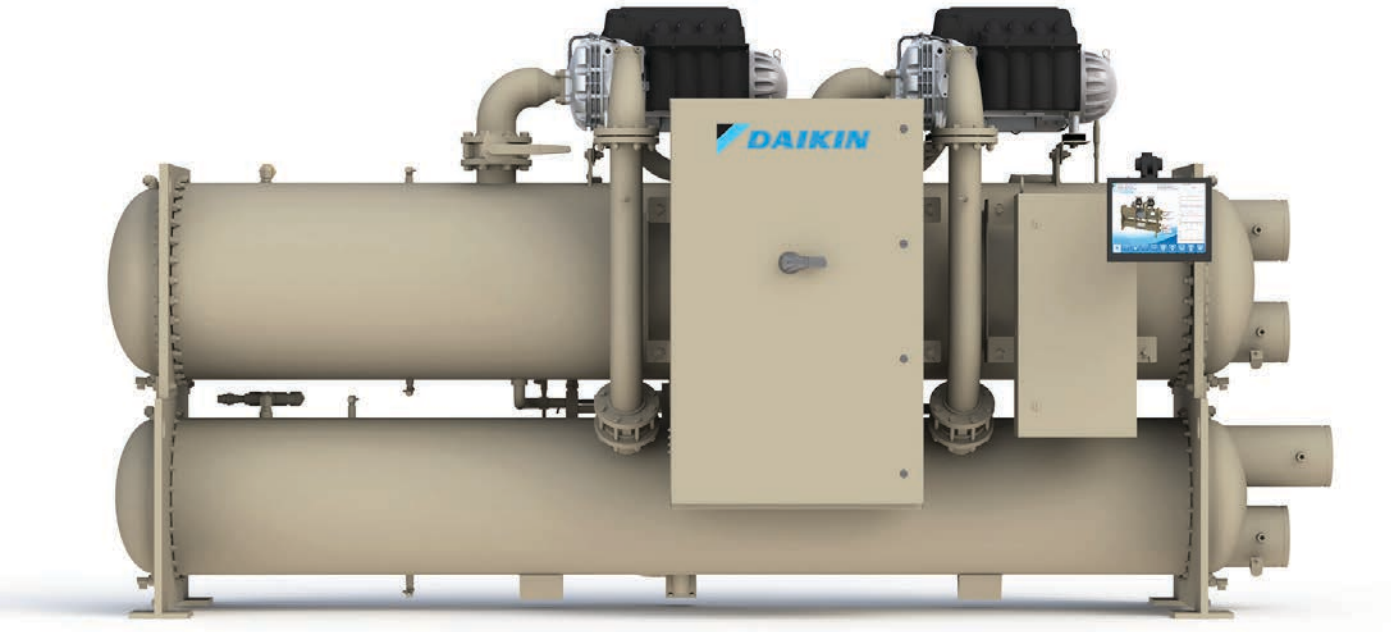

Introduction. 3
Installation. 6
Operation. 28
Maintenance 63
Appendix 65

Manufactured in an ISO 9001 & ISO 14001 certified facility

©2018 Daikin Applied. Illustrations and data cover the Daikin Applied product at the time of publication and we reserve the right to make changes in design and construction at any time without notice.

Pre-Start Checklist – Centrifugal Chillers

Must be completed, signed and returned to Daikin Applied service dept. at least 2 weeks prior to requested start date.

Job Name	
Installation Location	
Customer Order Number	
Model Number(s)	
G.O. Number(s)	

Chilled Water	**Yes**	**No**	**N/A**	**Initials**
Piping Complete	☐	☐	☐	
Water System – flushed, filled, vented; Water treatment in place	☐	☐	☐	
Pumps installed and operational (rotation checked, strainers installed and cleaned)	☐	☐	☐	
Controls operational (3-way valves, face/bypass dampers, bypass valves, etc.)	☐	☐	☐	
Water system operated and tested; flow meets unit design requirements	☐	☐	☐	
Condenser Water	**Yes**	**No**	**N/A**	**Initials**
Cooling tower flushed, filled, vented; Water treatment in place	☐	☐	☐	
Pumps installed and operational (rotation checked, strainers installed and cleaned)	☐	☐	☐	
Controls (3-way valves, bypass valves, etc.) operable per IM/IOM	☐	☐	☐	
Water system operated and flow balance to meet unit design requirements	☐	☐	☐	
Electrical	**Yes**	**No**	**N/A**	**Initials**
115 volt service completed, but not connected to control panel (remote mounted starters)	☐	☐	☐	
Line Power Leads connected to starter; load leads(b) run from starter to compressor, ready for connection by Service (Do not connect load leads to starter or compressor terminals). (See Notes 1 & 4)	☐	☐	☐	
All interlock wiring complete and compliant with Daikin Applied specifications	☐	☐	☐	
Starter complies with Daikin Applied specifications	☐	☐	☐	
*Oil cooler solenoid wired to control panel as shown on wiring diagram (See Notes)	☐	☐	☐	
Pump starter and interlocks wired	☐	☐	☐	
Cooling tower fans and controls wired	☐	☐	☐	
Wiring complies with National Electrical Code and local codes (See Note 4)	☐	☐	☐	
Condenser pump starting relay (CP1,2) installed and wired (See Note 3)	☐	☐	☐	
Miscellaneous	**Yes**	**No**	**N/A**	**Initials**
*Oil cooled water piping complete. (Units with water-cooled oil coolers only)	☐	☐	☐	
Relief valve piping complete (per local codes)	☐	☐	☐	
Thermometers, wells, gauges, control, etc., installed	☐	☐	☐	
Minimum system load of 80% capacity available for testing/adjusting controls	☐	☐	☐	
Document Attached: Technical Breakdown from Daikin Tools	☐	☐	☐	
Document Attached: Final Order Acknowledgement	☐	☐	☐	

Notes: The most common problems delaying start-up and affecting unit reliability are:

1. Field installed compressor motor power supply leads too small. Questions: Contact the local Daikin Applied sales representative. State size, number and type of conductors and conduits installed:
   a. From Power supply to starter _____
   b. From starter to chiller unit (remote mounted)_____
2. Centrifugal chillers with water cooled oil coolers must have a 115 volt normally closed water solenoid valve installed in the oil cooler water supply line. Daikin Applied recommends ASCO Type 8210B27 solenoid valve or approved equal and 40-mesh strainer. Daikin Applied does not supply these components.
3. A 115-volt field-supplied relay (CP1,2) must be used to start/stop condenser water pump on most applications. Cold condenser water must not flow through condenser during compressor off cycle. Provisions have been made in control center for connecting CP relay, but must not have a rating in excess of 100 VA.
4. Refer to NEC Article 430-22 (a)

***Does Not Apply to Magnetic Bearing Chillers (WMC/WME)**

Contractor Representative

Signed: _____

Name: _____

Company: _____

Date: _____

Phone/Email: _____

Daikin Applied Sales Representative

Signed: _____

Name: _____

Company: _____

Date: _____

Phone/Email: _____

Cut Here

This manual provides installation, operation, and maintenance information for Daikin WMC Magnitude® centrifugal chillers with the MicroTech® II controller.

⚠ WARNING

Electric shock hazard. Improper handling of this equipment can cause personal injury or equipment damage. This equipment must be properly grounded. Connections to and service of the MicroTech® II control panel must be performed only by personnel that are knowledgeable in the operation of the equipment being controlled.

⚠ CAUTION

Static sensitive components. A static discharge while handling electronic circuit boards can cause damage to the components. Discharge any static electrical charge by touching the bare metal inside the control panel before performing any service work. Never unplug any cables, circuit board terminal blocks, or power plugs while power is applied to the panel.

⚠ CAUTION

When moving refrigerant to/from the chiller from an auxiliary tank, a grounding strap must be used. An electrical charge builds when halo-carbon refrigerant travels in a rubber hose. A grounding strap must be used between the auxiliary refrigerant tank and the chiller's end sheet (earth ground), which will safely take the charge to the ground. Damage to sensitive electronic components could occur if this procedure is not followed.

NOTICE

This equipment generates, uses, and can radiate radio frequency energy. If not installed and used in accordance with this instruction manual, it may cause interference with radio communications. Operation of this equipment in a residential area is likely to cause harmful interference in which case the owner will be required to correct the interference at the owner's own expense.

Daikin Applied disclaims any liability resulting from any interference or for the correction thereof.

HAZARD IDENTIFICATION INFORMATION

⚠ DANGER

Dangers indicate a hazardous situation, which will result in death or serious injury if not avoided.

⚠ WARNING

Warnings indicate potentially hazardous situations, which can result in property damage, severe personal injury, or death if not avoided.

⚠ CAUTION

Cautions indicate potentially hazardous situations, which can result in personal injury or equipment damage if not avoided.

General Description

Daikin Magnitude® Centrifugal Chillers are complete, self-contained, automatically controlled, liquid-chilling units featuring oil-free, magnetic bearing compressors. All Magnitude® chillers are equipped with a single evaporator and a single condenser along with either one or two compressors depending on the model. TMC Templifier units are equipped with centrifugal compressors and are available as a configuration, each with optional pass arrangements.

Magnitude® chillers are designed for indoor, non-freezing installation only. The chillers use refrigerant HFC-134a that operates at a positive pressure over the entire operation range, so no purge system is required.

Only normal field connections such as water piping, relief valve piping, electric power, and control interlocks are required, thereby simplifying installation and increasing reliability. Necessary equipment protection and operating controls are included.

All Daikin Applied centrifugal chillers must be commissioned by a factory-trained Daikin Applied service technician. Failure to follow this startup procedure can affect the equipment warranty.

The standard limited warranty on this equipment covers parts that prove defective in material or workmanship. Specific details of this warranty can be found in the warranty statement furnished with the equipment.

NOMENCLATURE

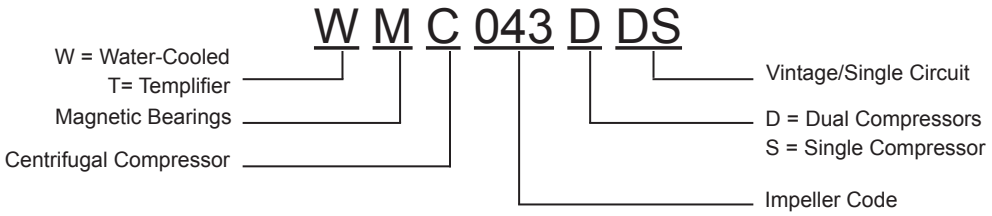

Figure 1: WMC-D Major Component Locations

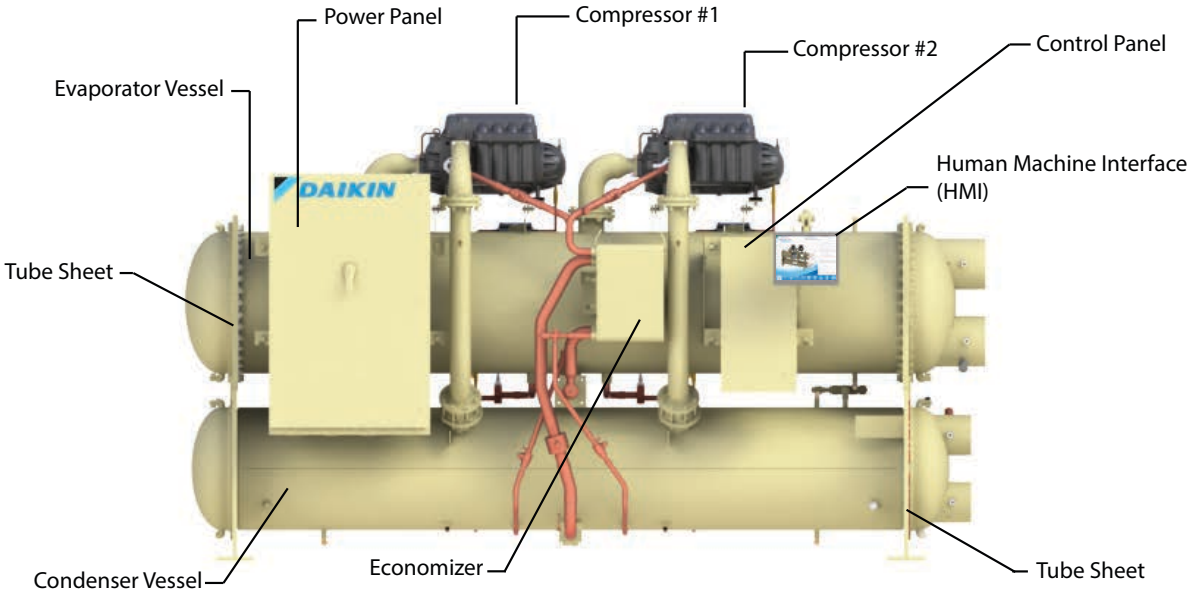

NOTE: Unit shown with right-hand water connections and optional economizer. Water connection orientation is based on facing the unit power panel.

The Control System

The centrifugal MicroTech® II control system consists of a human machine interface touch screen (HMI), a microprocessor-based unit controller, and compressor on-board controllers, providing monitoring and control functions required for the efficient operation of the chiller.

Human Machine Interface

The human machine interface (HMI) screen, (see Figure 2 for an example of a screen display), is the primary device for viewing unit operation information and entering commands and entries into the control system. Select information from the HMI panel can be downloaded via a USB port located on the side of the touchscreen panel.

A single HMI is used per unit. The HMI panel, see Figure 1, is mounted on a moveable arm to allow placement in a convenient position for the operator. The HMI PC is located in the Control Panel, as shown in Figure 3. For more information on the HMI, see "Machine Interface Screen (HMI)" on page 30.

Figure 2: Machine Interface Touch Screen

Unit Controller

The purpose of the MicroTech® II unit controller is to acquire and process data relating to chiller operation, issue instructions to various components of the chiller, and maintain controlled operation of the chiller. As a part of operating the chiller successfully, the unit controller offers necessary condenser water control. See "Water Piping" on page 16 for more information.

The controller is located in the control panel, as shown in Figure 3. It has a 4x20 LCD display and keys for accessing data and changing setpoints. The controller sends information to the machine interface touch screen (HMI) for graphic display. If the HMI should become inoperable, the controller LCD can display most of the same information as the HMI and can be used to operate the chiller independently of the HMI. See "The Controller" on page 57 for information.

Figure 3: Control Panel

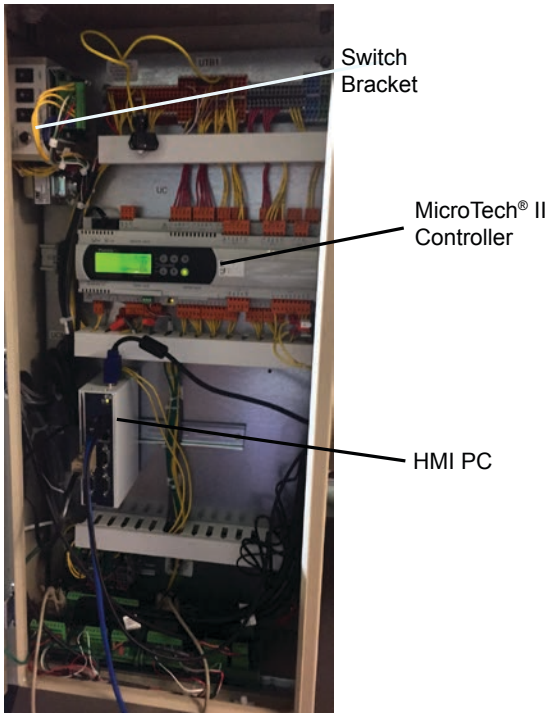

Compressor On-Board Controllers

Each compressor is equipped with microprocessor controllers and sensors that provide control and data acquisition. The data is transmitted to other controllers and the HMI via the multi-unit communication network. The on-board controllers control compressor functionality and the motor/bearing system.

Figure 4: Compressor Cutaway

1. Power Electronics
2. Control Electronics

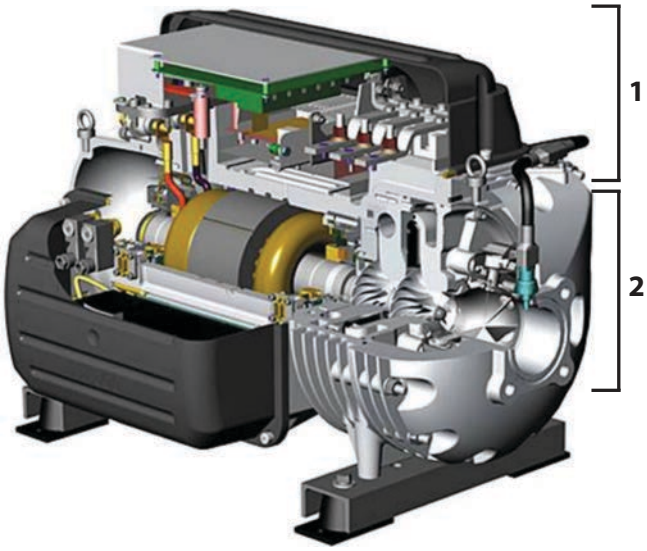

Nameplates

There are several identification nameplates on the chiller:

- The unit nameplate is located on the exterior of the Unit Control Panel. Both the Model No. and Serial No. are located on the unit nameplate; the Serial No. is unique to the unit. These numbers should be used to identify the unit for service, parts, or warranty questions. This plate also has the unit refrigerant charge and electrical ratings.
- Vessel nameplates are located on the evaporator and condenser. They have a National Board Number (NB) and a serial number, either of which identify the vessel (but not the entire unit).

Receiving and Handling

The unit should be inspected immediately after receipt for possible damage. All Daikin Applied centrifugal water chillers are shipped FOB factory and all claims for handling and shipping damage are the responsibility of the consignee.

On units with factory-installed insulation, the insulation is removed from the vessel lifting hole (also used for transportation tie-downs) locations and is shipped loose. It should be secured in place after the unit is finally placed. Neoprene vibration isolation pads are shipped loose in the power panel. If the unit is equipped with a shipping skid, leave the skid in place until the unit is in its final position. This will aid in handling the equipment.

⚠ CAUTION

Extreme care must be used when rigging the unit to prevent damage to the control panels and refrigerant piping. See the certified dimension drawings included in the job submittal for the weights and center of gravity of the unit. If the drawings are not available, consult the local Daikin Applied sales office for assistance.

The unit can be lifted by fastening the rigging hooks to the four corners of the unit where the rigging eyes are located — see Figure 5. A spreader bar must be used between the rigging lines to prevent damage to the control panels, piping, and electrical panels. The spreader-bar length should be equal to, or no more than 1-foot shorter than, the distance between the lifting holes located at opposite ends of the chiller. The unit will require a single spreader-bar of this length capable of supporting 1.5 times the shipping weight of the unit. Separately, all cables and hooks by themselves must also be capable of supporting 1.5 times the shipping weight of the unit.

If a knockdown option was ordered on the unit, reference the "Retrofit Knockdown" section starting on page 9 for more information.

Figure 5: WMC Unit Rigging

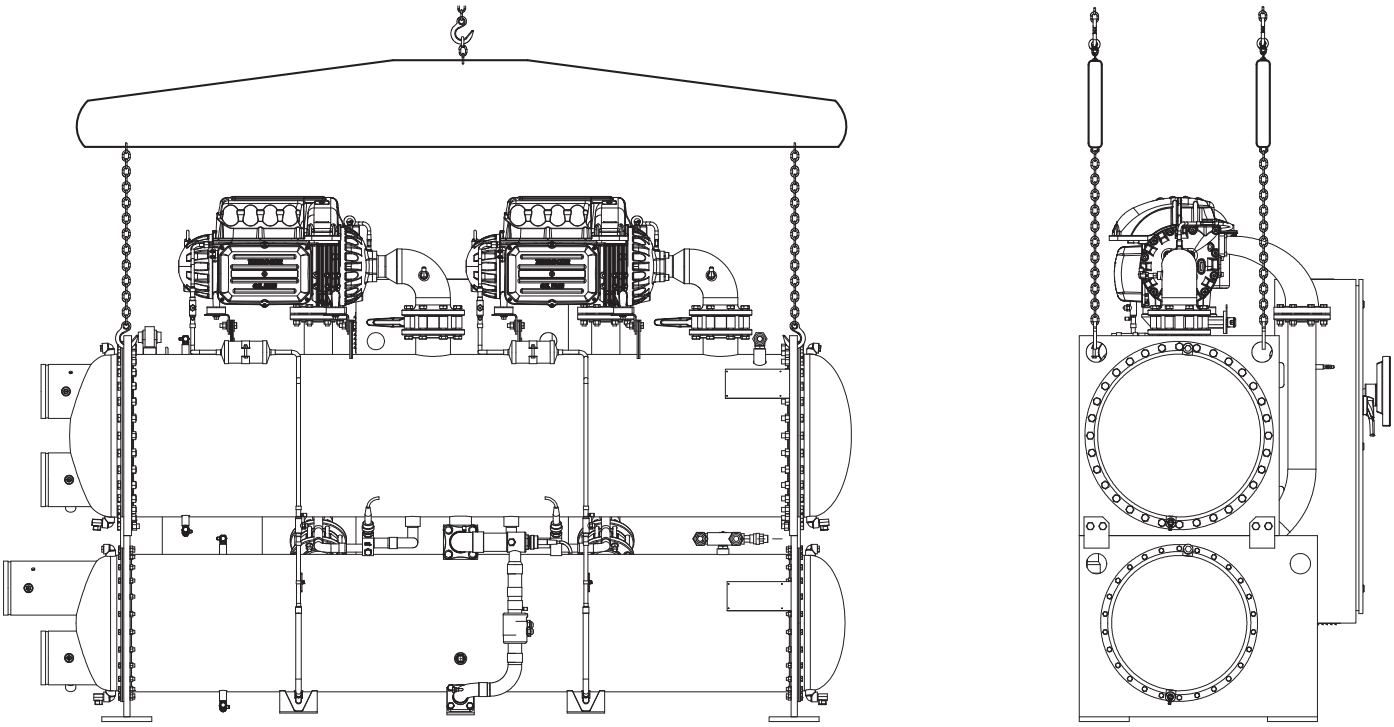

NOTE: The spreader bars in Figure 5 are a representation only and may not reflect the appearance of the actual spreader bars needed.

Unit Dimensions and Shipping Weight

Figure 6: WMC Dual Compressor Unit (2-pass, right-hand configuration, with grooved connections)

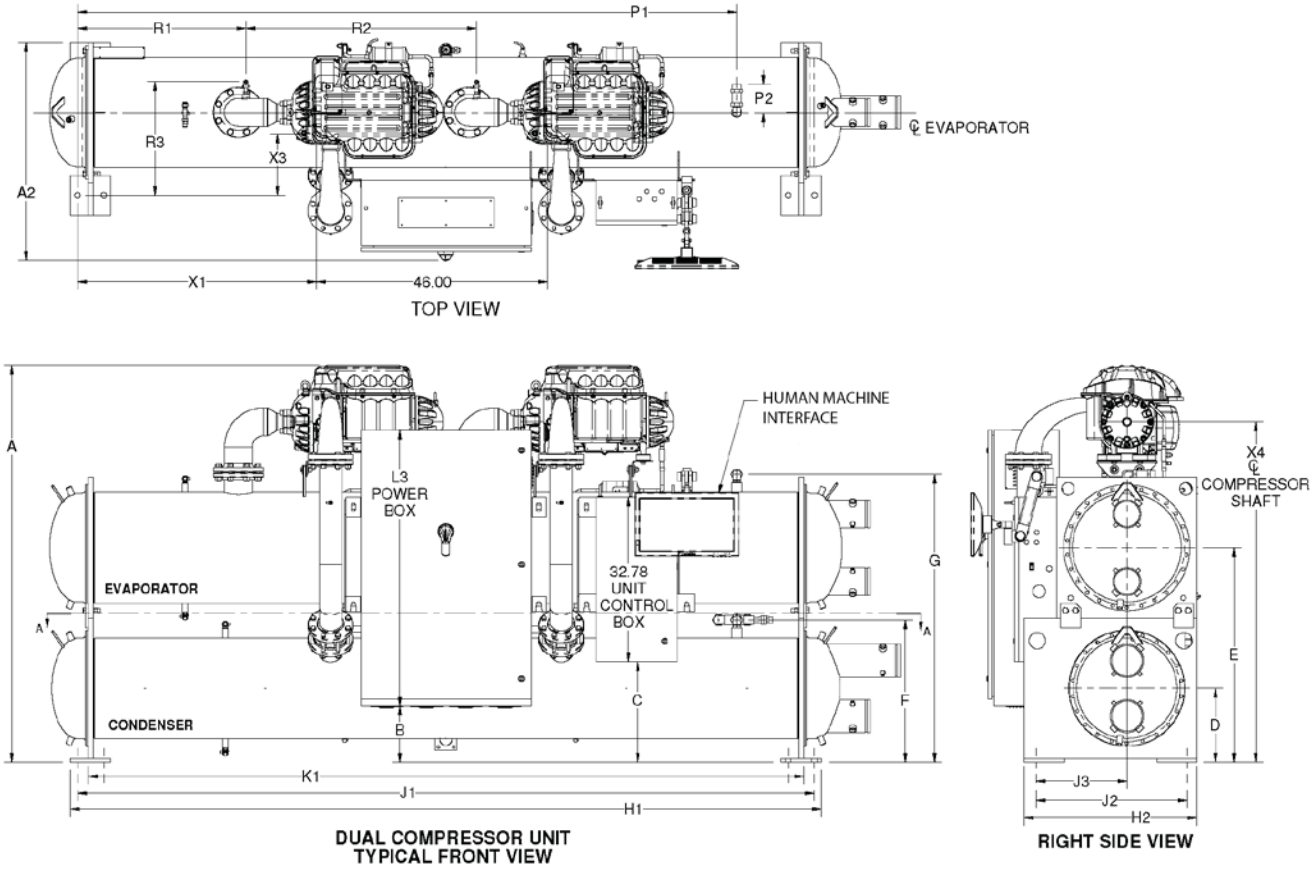

Table 1: WMC Dual Dimensions and Shipping Weights

Model	Heat Exchanger	Length in (mm)	Width * in (mm)	Height in (mm)	Shipping Weight ** lb (kg)
036D-SN	**E2209/C2009**	134.70 (3421)	43.42 (1103)	79.02 (2007)	6367 (2888)
036D-SN	**E2212/C2012**	169.59 (4308)	43.42 (1103)	79.02 (2007)	7477 (3392)
043D-SN	**E2609/C2209**	135.72 (3447)	47.17 (1198)	84.01 (2134)	7517 (3409)
048D-SN	**E2609/C2209**	135.72 (3447)	47.17 (1198)	84.01 (2134)	7517 (3409)
043D-SN	**E2612/C2212**	170.61 (4333)	47.17 (1198)	84.01 (2134)	8898 (4036)
048D-SN	**E2612/C2212**	170.61 (4333)	47.17 (1198)	84.01 (2134)	8898 (4036)
048D-SE* **	**E2612/C2212**	170.61 (4333)	47.17 (1198)	84.01 (2134)	9768 (4431)
060D-SN	**E3009/C2609**	137.09 (3402)	55.17 (1401)	94.50 (2400)	9747 (4421)
060D-SN	**E3012/C2612**	171.98 (4368)	55.17 (1401)	94.50 (2400)	11470 (5203)
060D-SE* **	**E3012/C2612**	171.98 (4368)	55.17 (1401)	94.50 (2400)	12475 (5658)

* Width is based on unit without optional harmonic filters.
** Shipping weight is based on unit with standard tube configuration.
*** Denotes unit with economizer

NOTE: See certified drawings for additional dimensional data

Figure 7: WMC Single Compressor Unit (2-pass, right-hand configuration, with grooved connections)

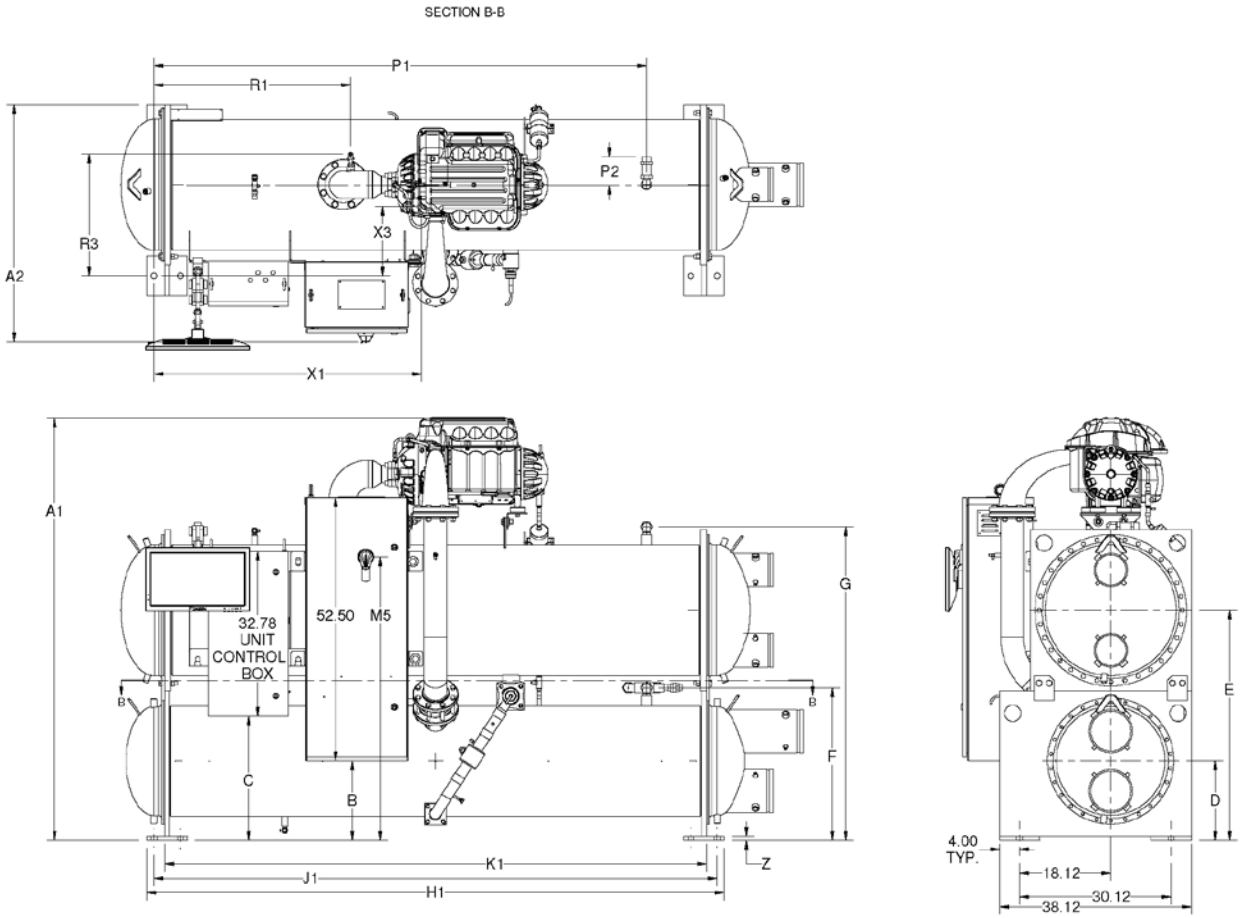

Table 2: WMC Single Dimensions and Shipping Weights

Model	Heat Exchanger	Length in (mm)	Width * in (mm)	Height in (mm)	Shipping Weight ** lb (kg)
043S-SN	**E2209/C2009**	130.80 (3322)	38.12 (965)	79.02 (2006)	4990 (2263)
048S-SN	**E2209/C2009**	130.80 (3322)	38.12 (965)	79.02 (2006)	4990 (2263)
060S-SN	**E2609/C2209**	130.80 (3322)	38.12 (965)	83.95 (2133)	6187 (2806)
060S-SE* **	**E2609/C2209**	130.80 (3322)	38.12 (965)	83.95 (2133)	7542 (3421)

* Width is based on unit without optional harmonic filters.
** Shipping weight is based on unit with standard tube configuration.
*** Denotes unit with economizer

NOTE: See certified drawings for additional dimensional data

Retrofit Knockdown

It is estimated that fifty percent of retrofit applications require partial or complete disassembly of the chiller. Magnitude® WMC chillers are relatively easy to disassemble due to the small compressor size, simplified refrigerant piping, and the absence of a lubrication system with its attendant components and piping. Two knockdown arrangements, Type A shown in Figure 8 and Type B shown in Figure 9, are available as options.

Type A Knockdown, "Bolt-Together Construction"

Chillers are built and shipped completely assembled with bolt-together construction on major components for field disassembly and reassembly on the job site.

Figure 8: Type A Knockdown

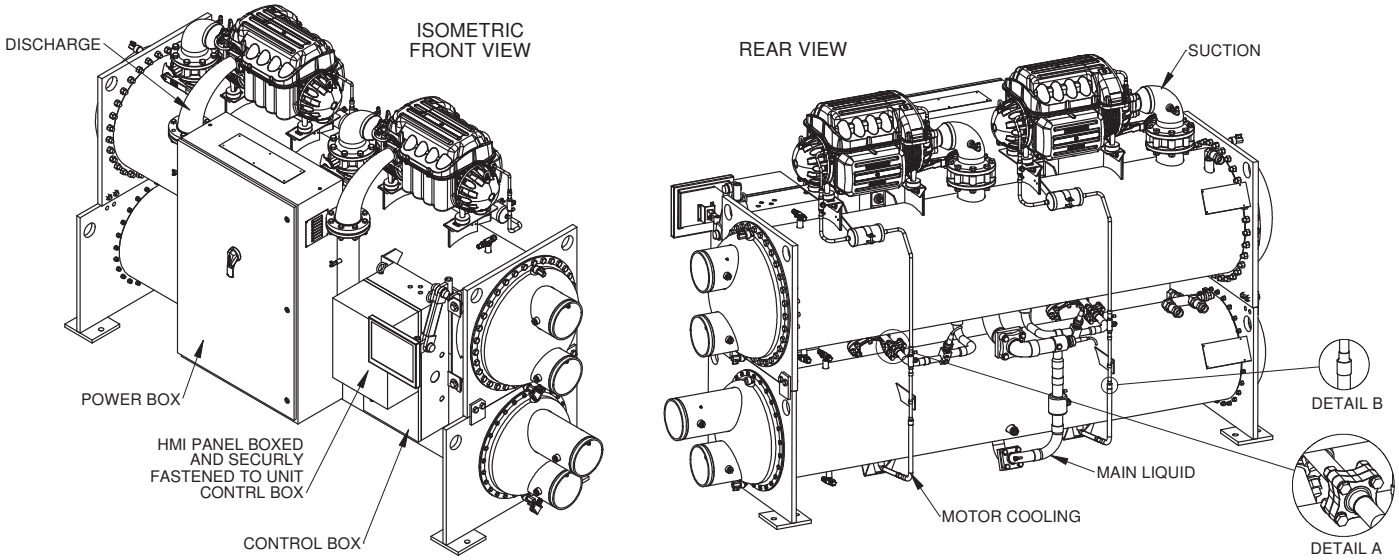

Type A Scope:

- Chiller components are manufactured with bolt-together construction designed for field disassembly and reassembly on-site.
- Unit ships completely assembled to the jobsite.
- Suction and discharge lines have bolt-on flanges.
- Motor cooling line is brazed at mechanical connections (see Detail B in Figure 8).
- Unit ships with vessel and/or head insulation, if ordered.
- Unit ships with full factory refrigerant charge in the chiller.
- Unit ships with replacement refrigerant gaskets and O-rings, stick-on wire ties, and touch-up paint.
- Unit is fully tested at the factory prior to shipment.
- Site disassembly and reassembly must be supervised or completed by Daikin Applied service personnel.
- Blockoff plates are required to cover any refrigerant connection left open for extended periods of time. Contact Daikin Applied service to obtain these parts.
- Ideal for retrofit applications where site diassembly is needed due to installation clearances.

Type B Knockdown, “Partial Disassembly”

Compressor(s), power box, and control box are removed and shipped on separate skids; combined vessel stack is shipped together as a sub-assembly.

Figure 9: Type B Knockdown

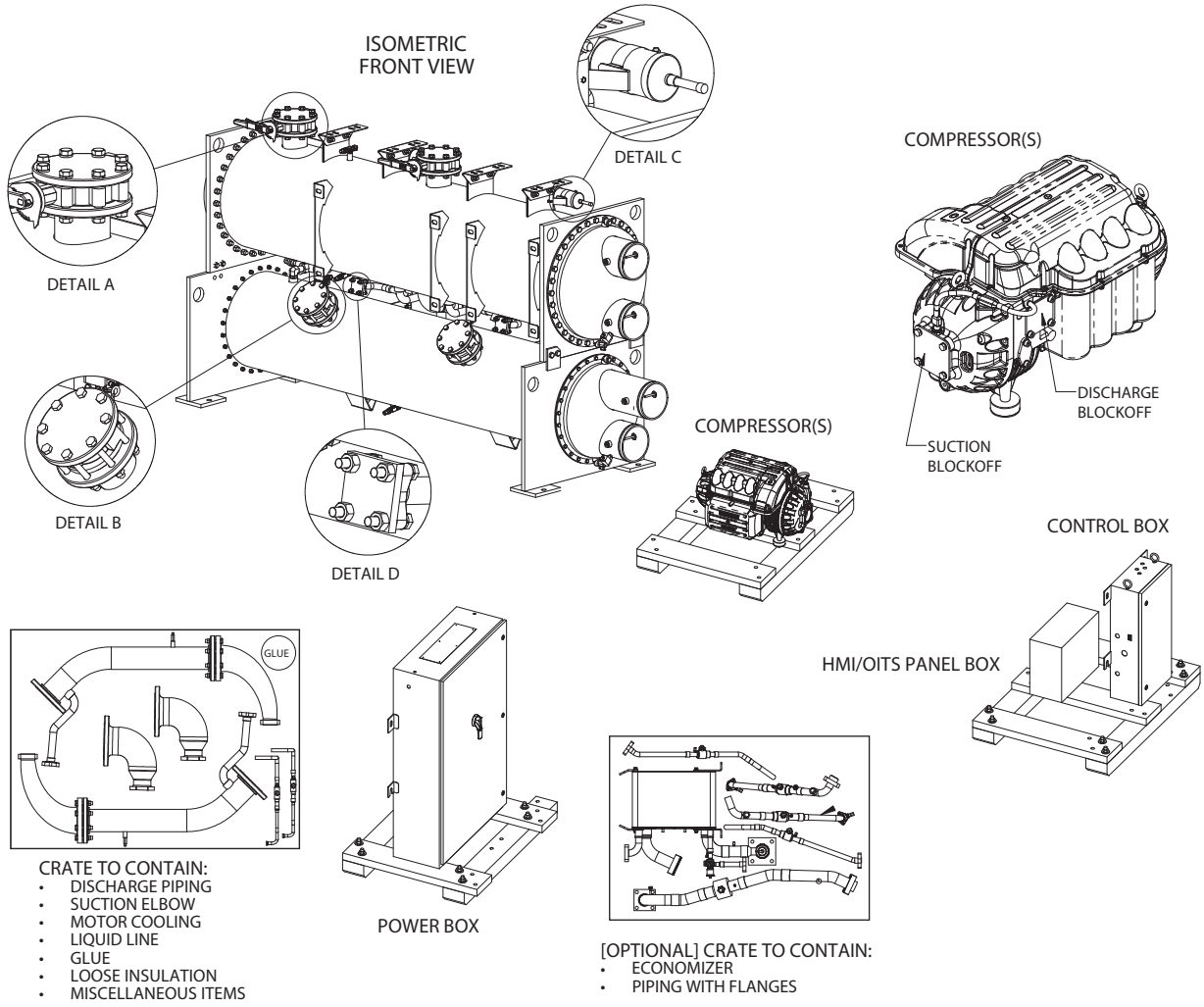

Type B Scope:

- Compressor(s), power box, control box and optional economizer are removed (at the factory) and shipped on separate skids; vessel stack is shipped as a complete sub-assembly.
- All associated piping and wiring remain attached, if possible.
- Suction and discharge lines have bolt-on flanges and, if possible, remain attached.
- All free piping ends are capped.
- Unit ships with vessel and/or head insulation, if ordered.
- Refrigerant will not be shipped with the chiller and must be procured by others.
- Compressor(s) and vessels receive an inert gas holding charge.
- Unit ships with replacement refrigerant gaskets and O-rings, stick-on wire ties, and touch-up paint.
- Unit is fully tested at the factory prior to shipment.
- Site reassembly must be supervised or completed by Daikin Applied service personnel. Cost for unit resassembly and supervision by Daikin Applied service is not included in the purchase price of the equipment. Contact Daikin Applied service for pricing.
- Ideal for retrofit applications where it is desired that the compressor(s), power box, and control box be removed at the factory, prior to shipment, and where refrigerant may be secured by others.

Unit Knockdown Dimensions

Figure 10: Unit Dimensional Diagram for Typical WMC Knockdown

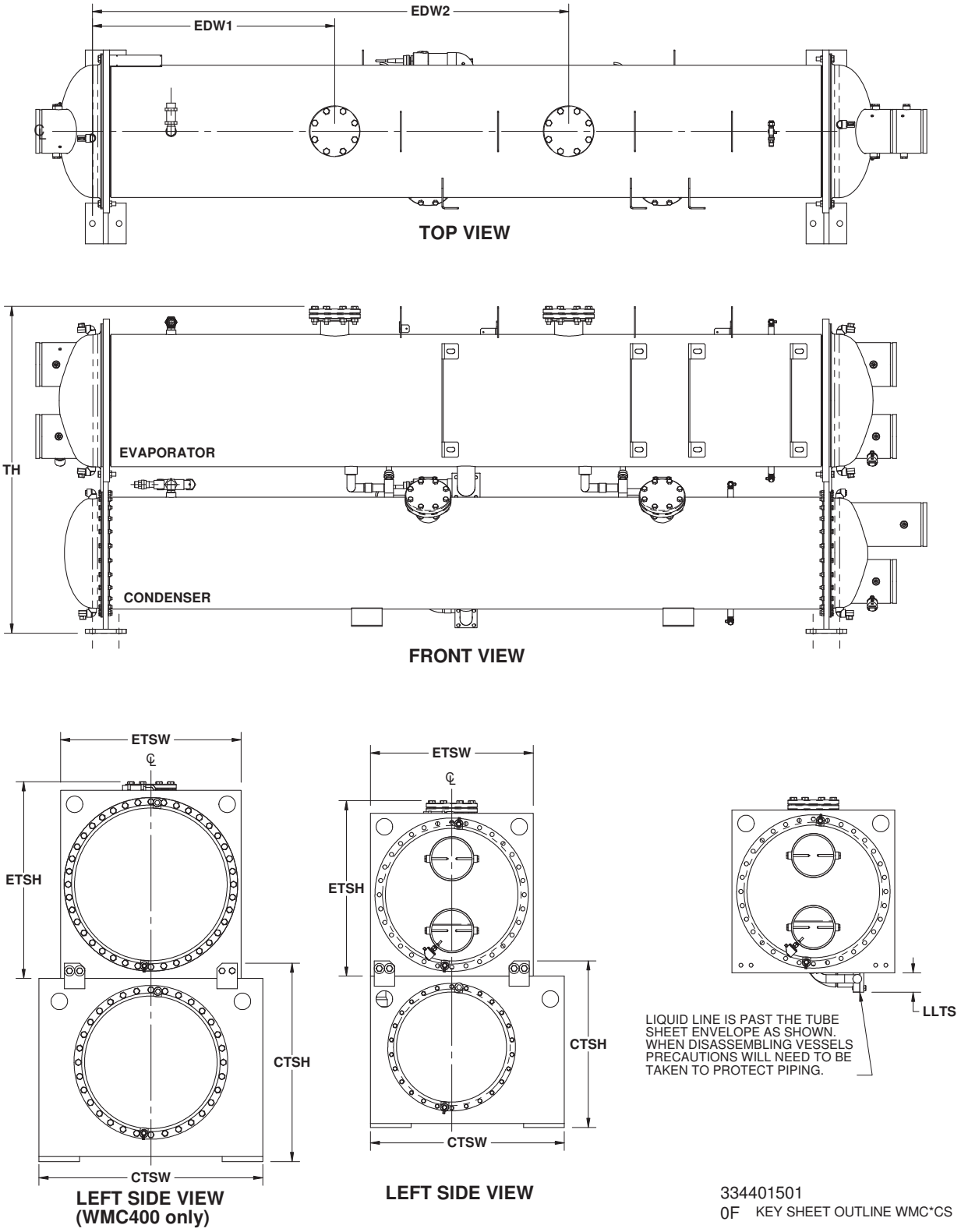

NOTE: See following page for overall unit length, width, and height dimensions for WMC models.

Table 3: Label Descriptions for Unit Dimensional Diagram

Label	Description
CTSW	Overall Width Condenser Assembly (Width of Tubesheet)
CTSH	Overall Height Condenser Assembly (Bottom of Tubesheet to Top of Discharge Flange)
EDW1	Width (Center of Outside of Foot Mounting Hole to Center of Suction #1)
EDW2	Width (Center of Outside of Foot Mounting Hole to Center of Suction #2)
ETSW	Overall Width Evaporator Assembly (Width of Tubesheet)
ETSH	Overall Height Evaporator Assembly (Bottom of Foot to Top of Joining Flanges)
LLTS	Height of Parts Extending Beyond Tubesheet
TH	Overall Height of Parts Extending Beyond Tubesheet

Table 4: WMC Knockdown Dimensions (in)

Label	Dimensions (in)									
	043S	**048S**	**036D**	**036D**	**060S**	**043D**	**048D**	**043D**	**048D**	**060D**
CTSW	34.5				38.1					44.0
CTSH	33.8				32.8					39.0
EDW1	56.0		13.9	45.2	37.7	14.4		47.7		45.7
EDW2	N/A		59.9	91.2	N/A	60.4		93.7		91.7
ETSW	30.4				34.5					38.7
ETSH	28.0				32.0					35.5
LLTS	2.9				3.8					3.6
TH	61.2				64.2					74.7

Table 5: WMC Knockdown Dimensions (mm)

Label	Dimensions (mm)									
	043S	**048S**	**036D**	**036D**	**060S**	**043D**	**048D**	**043D**	**048D**	**060D**
CTSW	876				968					1118
CTSH	857				832					991
EDW1	1423		354	1147	957	366		1210		1160
EDW2	N/A		1522	2316	N/A	1535		2379		2328
ETSW	773				876					982
ETSH	711				813					902
LLTS	74				97					91
TH	1554				1632					1897

Compressor Dimensions

The compressor dimensions on all WMC models are the same. The dimensions are shown in Figure 11

Figure 11: Compressor Dimensions for all WMC Models

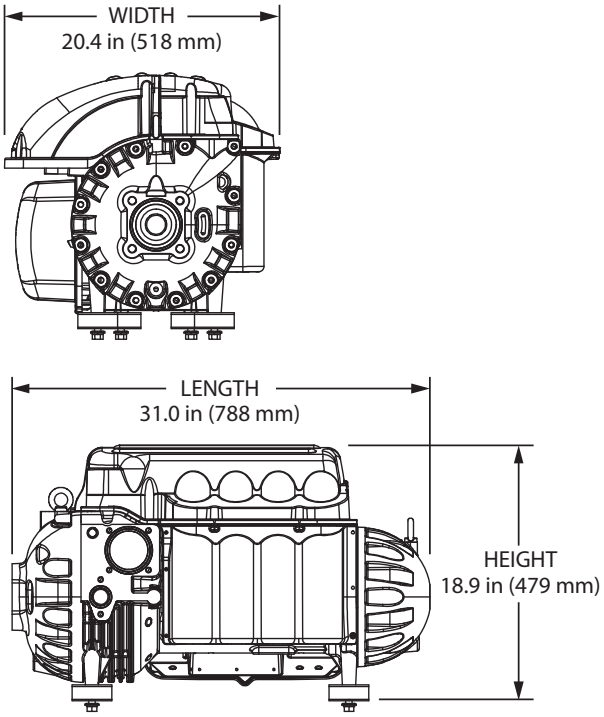

NOTE: Compressor mounting bolts are removable.

Component	Dry Weight	
	LBS	KG
E3012 Evaporator	5075	2299
C2612 Condenser	3900	1767
E2209 Evaporator	2708	1227
C2009 Condenser	2230	1010
E2212 Evaporator	3071	1391
C2012 Condenser	2677	1213
E2609 Evaporator	3210	1454
C2209 Condenser	2511	1137
E2612 Evaporator	3880	1758
C2212 Condenser	3031	1373
E3009 Evaporator	4397	1992
C2609 Condenser	3210	1454
Compressor	330	150

* Component weights based on unit with standard tube configuration

Compressor Rigging Requirements

To properly rig the compressor, attach a sufficient chain hoist to each compressor eyebolt. (There is one eyebolt at each end of the compressor.) Use a spreader bar between the two chain hoists, as shown in Figure 12, to safely lift the compressor.

Figure 12: WMC Compressor Rigging Setup

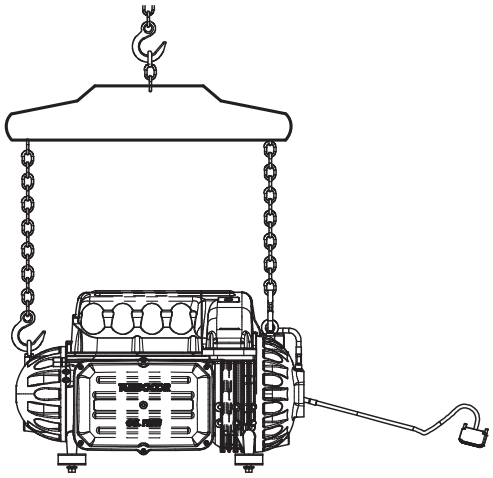

NOTE: The spreader bar in Figure 12 is a representation only and may not reflect the appearance of the actual spreader bar needed.

Compressor Removal and Re-Attachment Instructions

Follow the steps listed to remove and re-attach the compressor.

Compressor Removal Preparation

1. Close the shutoff valve at condenser liquid line outlet.
2. Close all other related shut-off valves.
3. Evacuate the refrigerant charge from the unit.
4. Ensure that the charge has been removed from the compressor and evaporator and that the discharge check valve is holding the charge in the condenser.
5. Loosen and remove bolts on the compressor discharge and suction flanges (see Figure 13, flag #2 and #3).
6. Disconnect motor cooling line and seal openings on both compressor and tubing.
7. Cover openings to prevent foreign objects from entering.
8. Disconnect control cable from J6 on IO board in MicroTech panel. Cable will remain connected to the compressor.
9. Disconnect power cables from compressor power terminals

Compressor Removal

1. Loosen and remove bolts on the suction elbow to butterfly valve flange. Remove suction elbow and install a flange cover on the valve.(see Figure 13, flag #6).

Figure 13: Compressor Removal / Re-Attachment

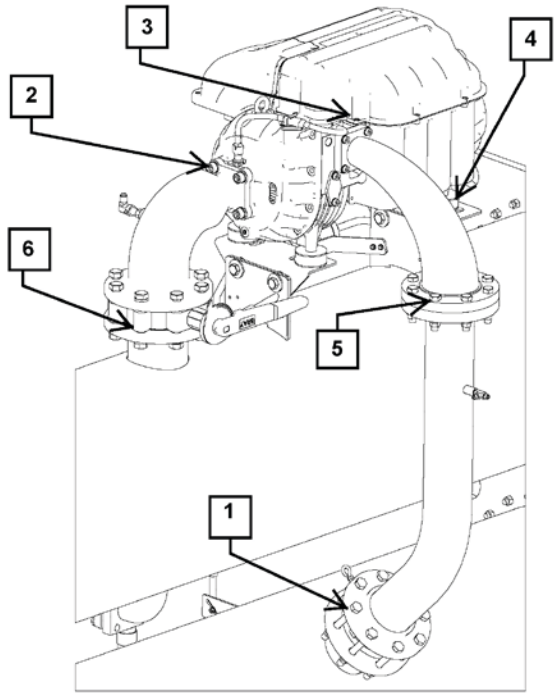

2. Remove bolts at discharge elbow connection to discharge line (flag #5) and install a flange cover. Warning: Do not loosen bolts at discharge check valve. (flag #1)
3. Loosen the (4) bolts from the compressor's bottom mounting feet (see Figure 13, flag #4).

   NOTE: Do not loosen or remove bolts securing the compressor brackets as height is pre-set from the factory.

Compressor Re-Attachment

1. Set compressor on mounting brackets and install the (4) mounting bolts loosely.
2. Reinstall suction and discharge elbows with new gaskets and O-rings.
3. Re-attach all associated power wiring and compressor control cable.
4. Reconnect motor cooling liquid line.
5. Evacuate the evaporator and compressor(s) to 500 microns and perform a standing hold to verify no moisture or leaks.
6. After verifying that pumps are running and water flow has been established on both evaporator and condenser, add vapor refrigerant to bring the saturated temperature above freezing. Open all valves.
7. Perform refrigerant leak check to ensure all connections and fittings are securely fastened.

Knockdown Disassembly and Reassembly Instructions

Type A

Type A units are designed for a wide range of disassembly and the degree of knockdown varies. Observe the following recommendations.

1. The chiller is shipped with the full refrigerant charge, which must be recovered before breaking any refrigerant connection. Before attempting any disassembly, assume the condenser isolation valves may have leaked and that any component of the chiller may be pressurized with refrigerant. Exert the proper precautions with this caveat in mind.
2. Check that power has been removed from the unit. Before disconnecting any wire, it is prudent to label its function and connection point to facilitate reconnection.
3. The refrigerant charge must be removed from the unit if the vessels are to be separated.
4. Some insulation repair and touch-up painting may be required.
5. See Type B instructions for reassembly of components.

Type B

Disassembly

Type B Knockdown units are shipped disassembled except for the vessel stack and are shipped less refrigerant. If the stack size or weight dictates further disassembly, the vessels can be separated by disconnecting any interconnecting wiring and tubing and then unbolting them. The vessels and compressors have an inert gas holding charge that must be released prior to attempting to open any connection.

Reassembly

⚠ CAUTION

Standard torque specs must be followed when re-installing bolts. Contact Daikin Applied service for this information.

1. Reassemble the vessel stack, if disassembled, and reconnect any wiring and tubing.
2. Mount the compressor(s) on the stack. Be careful to avoid damaging lines already mounted on the unit. Mounting bolts, washers and nuts are shipped loose. Leave the mounting bolts loose until the suction and discharge lines are installed and aligned.

   During assembly, bolts holding block off plates (suction connection, for example), are used for reassembly of the component. See Figure 9 on page 10 for the location of the block offs.
3. Do not remove block offs until ready to install piping. The compressor and vessels have a Schrader valve on their block off plates to be used for relieving the inert gas holding charge.

⚠ WARNING

Remove compressor, piping or vessel holding charge through the Schrader valve in the block off plates before attempting to loosen any fittings on them. Failure to do so can cause severe bodily injury.

4. Install the suction and discharge piping. The piping is shipped in a crate, as shown in Figure 9 on page 10. Assemble as shown in Figure 8 on page 9. Tighten bolts after the entire line has been installed and aligned. Insulate the suction line with the insulation and glue provided.
5. Install the liquid line and motor cooling lines. These lines are shipped in a crate, as shown in Figure 9 on page 10. Assemble as shown in Figure 8 on page 9.
6. Install control panel and compressor power panels by bolting to the horizontal support members.
7. If the unit has single-point power, connect the power leads from the terminal box under the control panel to each power panel line side connection.
8. If unit is equipped with an economizer, connect piping to compressor interstage point and flanges located on the evaporator and condenser.
9. Connect any loose wiring.
10. Pressure (leak) test, evacuate, and charge with field supplied HFC-134a using standard refrigeration practice.

Location

WMC chillers are intended only for installation in an indoor or weather protected area consistent with the NEMA 1 rating on the chiller, controls, and electrical panels. Equipment room temperature for operating and standby conditions is 40°F to 104°F (4.4°C to 40°C).

NOTE: Excessive humidity in the mechanical room should be avoided. Excessive humidity in the mechanical room can potentially lead to premature component wear on/near all cool surfaces which can condense water. If possible the mechanical room should be conditioned which can extend the useful lifetime for all mechanical room equipment.

Clearance

The unit must be placed in an area that allows for adequate clearance around the unit. See Figure 14 for clearance requirements around the sides of the chiller. Doors and removable wall sections can be utilized to meet these clearance requirements. There must be a minimum 3-feet clearance above the top of the chiller. The U.S. National Electric Code (NEC) or local codes can require more clearance in and around electrical components and must be checked for compliance.

Mounting

The unit must be mounted on a concrete or steel base. Make sure that the floor or structural support is adequate to support the full operating weight of the complete unit.

The neoprene vibration pads (shipped loose in the power panel) should be placed under the corners of the unit (unless the job specifications state otherwise). They must be installed so that they are flush with the edges of the unit feet.

It is not necessary to bolt the unit to the mounting slab or framework. Should this be required by local codes, 1-1/8 inch (28.5 mm) mounting holes are provided in the unit supports at the four corners.

When mounted, the base pad of the unit must be level to within ± 1/2 inch (12.7 mm) across the length and width of the unit.

Figure 14: Minimum Clearances Based on Standard Waterboxes

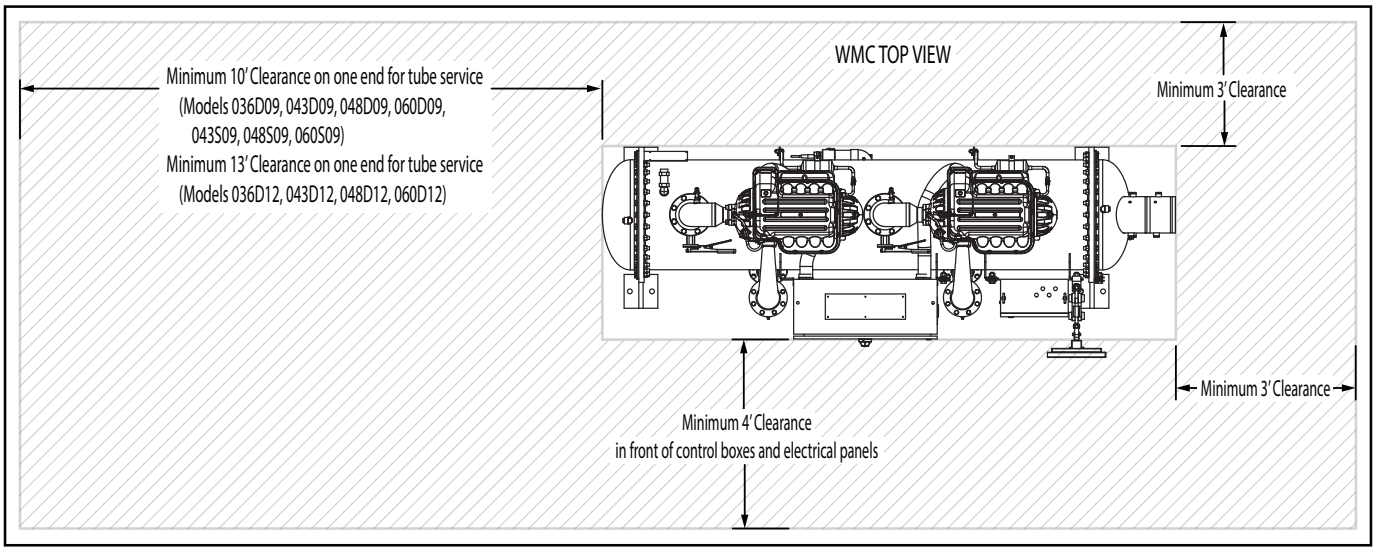

NOTE: Hinged type waterboxes may require more clearance. Consult a Daikin Applied sales representative for details.

Water Piping

Be sure that water inlet and outlet connections match certified drawings and nozzle markings. All evaporators and condensers have OGS-type grooved water connections (adhering to Standard AWWA C606) or optional flange connections. The installing contractor must provide matching mechanical connections. PVC piping should not be used.

⚠ CAUTION

If welding is to be performed on the mechanical or flange connections:

1. Remove the solid-state temperature sensor, thermostat bulbs, and nozzle mounted flow switches from the wells to prevent damage to those components.
2. Properly ground the unit or severe damage to the MicroTech® II unit controller can occur.

NOTE: ASME certification will be revoked if welding is performed on a vessel shell or tube sheet.

The water heads can be interchanged (end for end) so that the water connections can be made at either end of the unit. If this is done, use new head gaskets and relocate the control sensors.

Field installed water piping to the chiller must include:

- air vents at the high points.
- a cleanable water strainer upstream of the evaporator and condenser inlet connections.
- a flow proving device for both the evaporator and condenser to prevent freeze up. Flow switches, thermal dispersion switches, or Delta-P switches can be used. Note that thermal dispersion flow switches are factory installed as standard. Additional flow switches can be used only if they are connected in series with the ones already provided. Connect additional flow switches in series between CF1 and CF2, shown in "Figure 20: Wiring Index" starting on page 22.
- sufficient shutoff valves to allow vessel isolation. The chiller must be capable of draining the water from the evaporator or condenser without draining the complete system.

It is recommended that field installed water piping to the chiller include:

- thermometers at the inlet and outlet connections of both vessels.
- water pressure gauge connection taps and gauges at the inlet and outlet connections of both vessels for measuring water pressure drop.

⚠ CAUTION

When common piping is used for both building heating and cooling modes, care must be taken to provide that water flowing through the evaporator cannot exceed 110°F. Water this hot can damage controls or cause the relief valve to discharge refrigerant.

Piping must be supported to eliminate weight and strain on the fittings and connections. Chilled water piping must be adequately insulated.

Checking Piping Circuits and Venting Air

After the water piping is completed tighten and torque to maintain between 30 and 60 ft. lbs. (41 and 81 N•m) the nuts on the liquid head flanges on both the evaporator and condenser. It is recommended that the evaporator head not be insulated until this is completed. Gasket shrinkage and handling during transit cause nuts to loosen. If water pressure is applied before tightening is done, the gaskets may be damaged and have to be replaced. Fill the chilled and condenser water circuits, operate the pumps manually and carefully check the evaporator and condenser water heads and piping for leaks. Repair leaks as necessary. Before initial operation of the unit both water circuits should be thoroughly vented of all air at the high points.

Vessel Drains at Startup

The unit is drained of water at the factory. Drain plugs for each vessel head are shipped separately in the contorl box. Units are shipped with the drain plug in the top water box drain hole and no plug in the bottom drain hole. Be sure to install the bottom drain plugs prior to filling the vessel with fluid. See Figure 15.

Figure 15: Drain Plug Installation

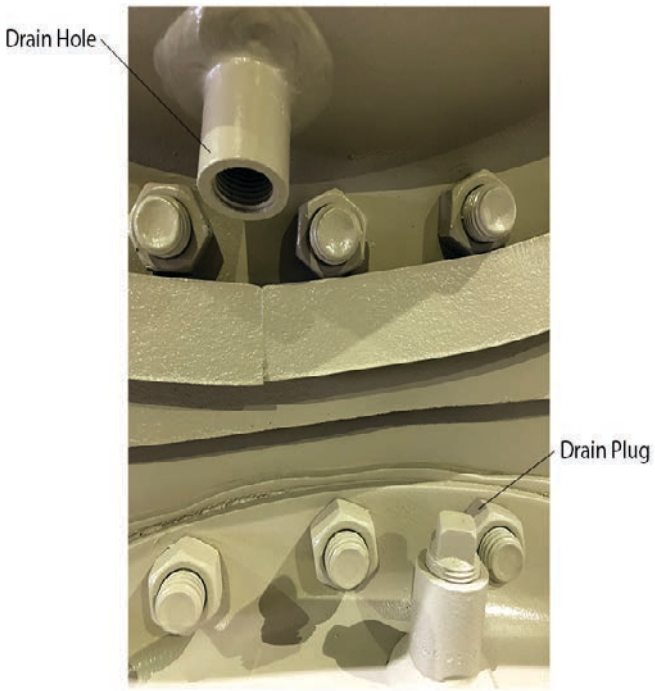

⚠ CAUTION

The water quality provided by the owner/occupant/operator/user to a chiller system should minimize corrosion, scale buildup, erosion, and biological growth for optimum efficiency of HVAC equipment without creating a hazard to operating personnel or the environment. Water systems should be cleaned and flushed prior to the chiller installation. Water testing and treatment should be verified during initial chiller installation/commissioning and maintained on a continuous basis by water treatment professionals (see Limited Product Warranty).

The use of detergents, chemicals, and additives in the chiller system water may adversely affect chiller performance and potentially lead to repair costs not covered by warranty. Any decision to use these products is at the discretion of the owner/occupant/operator/user as such they assume full liability/responsibility for any damage that may occur due to their use.

Condenser Water Temperature Control

Condenser water control is an important consideration in chiller plant design since condenser water temperature will directly impact chiller operation and efficiency. When the ambient wet bulb temperature is lower than peak design, the entering condenser water temperature from the cooling tower can be allowed to fall, improving chiller performance. However, operational issues may occur when the condenser water temperatures are either too high or too low. The WMC chiller provides several options to assist the chiller plant designer in providing the optimum control of condenser water temperature.

Cooling Tower Control

Control of the cooling tower is required to maintain stability and avoid operational issues. This can be achieved through a BAS or by using the MicroTech® II controller. For systems utilizing a common condenser water loop for multiple purposes, the BAS contractor must provide the control but use of the MicroTech® II output signal is still recommended.

The preferred cooling tower control utilizes a variable speed fan. MicroTech® II will provide a control signal to determine the proper fan speed. It can also control up to four stages of fan cycling. Note that fan cycling can cause cooling tower water temperature to fluctuate as fans stage on/off, potentially adding instability to the system.

Special consideration must be given to starting the chiller when cold condenser water is present, such as with inverted starts or changeover from free (tower) cooling to mechanical cooling. It is required that some method be used to control the condenser water to maintain proper head pressure as indicated by the MicroTech® II controller.

Acceptable methods include the following **(Each of these options can be controlled by the MicroTech® II or through a BAS utilizing the MicroTech® II output signals.)**:

1. Three-Way Bypass Valve Operation

   A traditional method for building condenser pressure at startup with colder condenser water is with the use of a three-way bypass valve. The device blends warmer water leaving the condenser with cooler water from the cooling tower at the condenser inlet. The bypass valve position will change until full flow from the tower to the condenser is obtained. The MicroTech® II provides only the valve position control signal. Main power to drive the valve's actuator must be provided by the installer. The three-way valve should be located close to the chiller within the equipment room to minimize the volume of water.
2. Two-Way Valve Operation

   Another condenser control method is to use a modulating two-way control valve located on the outlet connection of the condenser. The valve will be nearly closed at startup to restrict water flow, which keeps generated heat in the condenser until an acceptable minimum condenser pressure is reached. As heat builds, the valve will open slowly until a full flow condition from the cooling tower is established. A separate power source is required to provide power to the valve actuator.

   NOTE: To ensure proper operation, caution should be used when utilizing the two-way valve option.
3. VFD Operating with a Condenser Water Pump

   A third method of condenser control for startup is utilizing a variable frequency drive with the condenser water pump. The speed will change as directed by the MicroTech® II output signal until design flow is reached. Speed adjustments may be required during the initial chiller startup as determined by the service technician.

NOTE: Not using the MicroTech® II logic to control valves and variable frequency drives may result in system instability, capacity reduction, and issues starting the chiller with cold condenser water temperature.

Condenser Pump Sequencing

It is recommended to utilize the logic built into the MicroTech® II controller to start the condenser pump and maintain condenser head pressure control. MicroTech® II has the capability to operate a primary pump and a secondary standby pump. The condenser water flow should be stopped when the chiller shuts off. This will conserve energy and prevent refrigerant from migrating to the condenser.

Lenient Flow Operation

For chiller startup, the condenser control systems can reduce the flow to low rates, which can make operation of a flow sensing device unreliable. The MicroTech® II controller has a "lenient flow" feature that acts as an override of the flow sensor while protecting the chiller by monitoring a condenser pressure setting that is below the high pressure cutout.

Water Side Economizer Cycle Operation

Water side economizers are commonly used for ASHRAE 90.1 compliance and energy savings. This system utilizes a heat exchanger external to the chiller when cold cooling tower water is available to provide cooling. The most common system has a heat exchanger used in conjunction with the chiller's evaporator.

The BAS contractor will need to provide controls for the heat exchanger including isolation valves and temperature control. The BAS contractor will also need to control the isolation valves for the chiller. It is important to use slow-acting type valves to prevent rapid changes in system flows. Changeover from economizer cooling to mechanical cooling requires one of the methods previously mentioned to maintain suitable condenser head pressure.

Contact your local Daikin Applied representative for more information on this application.

Relief Valves

As a safety precaution and to meet code requirements, each chiller is equipped with pressure relief valves located on the condenser, evaporator, and compressor suction line(s) for the purpose of relieving excessive refrigerant pressure (caused by equipment malfunction, fire, etc.) to the atmosphere.

Table 6: Relief Valve Data

Chiller	WMC		
Relief Valve	Evaporator	Condenser	Suction Line*
Location	Top of evaporator	Top of condenser	Each suction line
Pressure Setting (psi)	200	225	200
Discharge Cap. (lb/min air)	75.5	84.4	6.9
Qty	1	2	1 per compressor
Connection Size	1.0-inch female NPT	1.0-inch female NPT	3/8-inch flare

Most codes require that relief valves be vented to the outside of a building. Relief piping connections to the relief valves must have flexible connectors.

Remove plastic shipping plugs (if installed) from the inside of the valves prior to making pipe connections. Whenever vent piping is installed, the lines must be in accordance with local code requirements; where local codes do not apply, the latest issue of ANSI/ASHRAE Standard 15 code recommendations must be followed.

Condenser Relief Valves

In order to ensure proper installation, it is important to know how the three-way relief valve functions. One valve remains active at all times and the second valve acts as a standby. When the stem of the three-way valve is pushed into the valve completely, the valve is in "Front Seated Position" and all refrigerant will flow through the back outlet port, as shown in Figure 17. When the stem of the three-way valve is pulled back completely, the valve is in "Back Seated Position" and all refrigerant will flow through the front outlet port as shown in Figure 18.

Figure 16: Condenser Three-Way Relief Valve

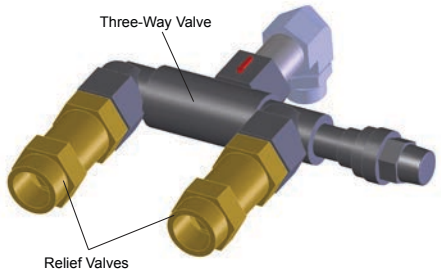

Figure 17: Three-Way Valve, Front Seated Position

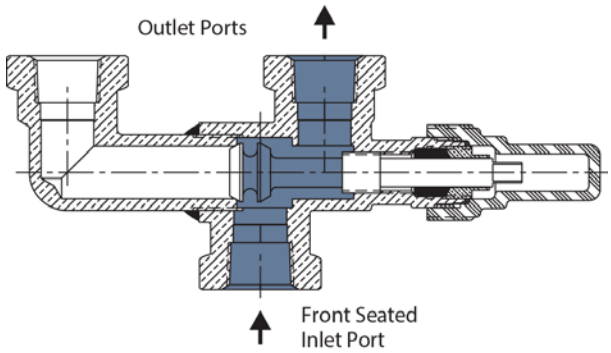

Figure 18: Three-Way Valve, Back Seated Position

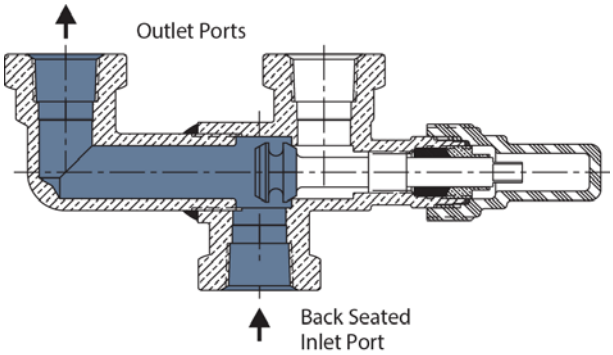

When the valve stem is not pushed forward or pulled back completely, the valve is in "Mid Position," as shown in Figure 19.

⚠ CAUTION

Do not operate the system with the three-way valve stem in the Mid Position.

Figure 19: Three-Way Valve, Mid Position

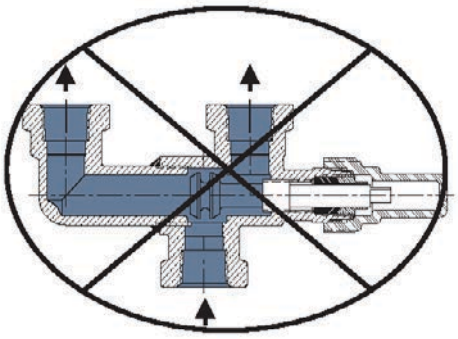

Sizing Vent Piping (ASHRAE Method)

Relief valve pipe sizing is based on the discharge capacity for the given evaporator or condenser and the length of piping to be run. Discharge capacity for R-134a vessels is calculated using a complicated equation that accounts for equivalent length of pipe, valve capacity, Moody friction factor, pipe ID, outlet pressure and back pressure. The formula and tables are contained in ASHRAE Standard 15-2001.

Using the ASHRAE formula and basing calculations on the 225 psi design yields a conservative pipe size. When valves are piped together, the common piping must follow the rules set out in the following paragraph on common piping.

Common Piping

According to ASHRAE Standard 15, the pipe size cannot be less than the relief valve outlet size. The discharge from more than one relief valve can be run into a common header, the area of which cannot be less than the sum of the areas of the connected pipes. For further details, refer to ASHRAE Standard 15.

Field Insulation

If the optional factory-installation of thermal insulation is not ordered, insulation should be field installed to reduce heat loss and prevent condensation from forming. Insulation should cover:

- the evaporator barrel, tube sheet, and waterboxes.
- the suction line from the top of the evaporator to the compressor inlet flange.
- the compressor support brackets welded to the evaporator.
- the liquid line from the expansion valve to the evaporator inlet, including the expansion valve.
- the part load balancing valve to the evaporator.

Approximate total square footage of insulation surface required for individual packaged chillers is tabulated by evaporator code.

Table 7: Insulation Area Required for WMC Models

WMC Model	Evaporator Code	Insulation Area sq. ft. (m^2)
043S	E2209	78 (7.2)
048S	E2209	78 (7.2)
036D	E2209	78 (7.2)
036D	E2212	104 (9.7)
060S	E2609	92 (8.5)
043D	E2609	92 (8.5)
048D	E2609	92 (8.5)
043D	E2612	122 (11.3)
048D	E2612	122 (11.3)
060D	E3009	106 (10.3)
060D	E3012	141 (13.1)

Field Power Wiring

The standard power wiring connection to Magnitude® chillers is single point to a common disconnect switch, which is then factory-wired to individual disconnect switches for each compressor. Refer to the unit nameplate and the Daikin Tools selection report for the correct electrical ratings.

⚠ DANGER

Qualified and licensed electricians must perform wiring. An electrical shock hazard exists that can cause severe injury or death.

The field power wiring required varies depending on unit model. See "Figure 20: Wiring Index" on page 22, "Figure 21: Controller Box Wiring" on page 24, and "Figure 22: Power Box Single and Multi Point Wiring" on page 26 for wiring information. These wiring diagrams are also provided with the chiller. Factory-mounted and wired line reactors are standard, but not included when the optional combo harmonic filters are included.

NOTE: Wiring, fuse and wire size must be in accordance with the National Electric Code (NEC). The supply voltage to these units must be within minimum and maximum range per the following table. Also, the voltage unbalance between phases must not exceed 2%.

WMC Nameplate Voltage	Minimum Voltage to Unit	Maximum Voltage to Unit
380	360 (5%)	440 (15%)
400	360 (10%)	440 (10%)
415	360 (13%)	440 (6%)
440	414 (6%)	506 (15%)
460	414 (10%)	506 (10%)
480	414 (13%)	506 (5%)
575	518 (10%)	632 (10%)

⚠ CAUTION

Do not use power factor correction capacitors with WMC chillers. Doing so can cause harmful electrical resonance in the system. Correction capacitors are not necessary since VFDs inherently maintain high power factors.

Chiller Control Power

For proper operation on standby power, the chiller control power must remain as factory-wired from a unit-mounted transformer. Do not supply chiller control power from an external power source because the chiller may not sense a loss of power and may fail to perform a normal shutdown sequence.

Communication Setup for Multiple Chillers

On multi-chiller Model WMC applications, up to four Model WMC chillers can be LAN interconnected by field RS485 interconnecting wiring (refer to Lines 165-174 on "Figure 20: Wiring Index") with the addition of an accessory communication isolation board between each chiller connected. The total number of isolation boards needed is one less than the number of chillers connected, or N-1 boards required. The isolation board can be purchased with the unit or separately, during or after chiller installation.

In order for interconnection to function properly, some of the chiller control settings will need to be modified. Interconnection between chillers should be made at startup by the Daikin Applied technician.

NOTE: WMC-B and WMC-C are compatible with each other for interconnection via pLAN, however, all connected chillers must share the same software revision and have the same version of chiller code. WMC-D is compatible for interconnection via pLAN with WMC-B and WMC-C, however, ALL connected chillers must share the same software revision AND have the HMI and PC used on the WMC-D model. If trying to connect WMC A to B, C or D models, consult a Daikin Applied service representative. WMC chillers cannot be pLAN interconnected with WSC, WDC, WCC or WME chillers.

Long Term Storage

This information applies to new units being stored waiting for startup or to existing units that may be inoperative for an extended period of time.

The chiller must be stored in a dry location indoors and protected from any damage or sources of corrosion. Monitor temperatures to protect from freeze or heat damage as described below. A Daikin Applied service representative must perform an inspection and leak test of the unit on minimum quarterly schedule, to be paid by the owner or contractor. Daikin Applied will not be responsible for any refrigerant loss during the storage time or for repairs to the unit during the period of storage, or while moving the unit from the original location to a storage facility and back to any new installation location. If there is concern about the possibilities of damage and loss of charge during storage, the customer can have the charge removed and stored in recovery cylinders.

⚠ CAUTION

If the temperature of where the chiller is located is expected to exceed 104°F (40°C), then the refrigerant must be removed.

For additional tasks required, contact Daikin Applied service.

Figure 20: Wiring Index

DRAWING INDEX

SHEET	DESCRIPTION:
1 OF 3	INDEX, LEGEND, FIELD CONNECTIONS AND SYMBOLS
2 OF 3	CONTROLLER BOX WIRING DIAGRAM
3 OF 3	POWER BOX SINGLE POINT & MULIT POINT WIRING DIAGRAM

SCHEMATIC LEGEND AND FIELD CONNECTIONS

A	ALARM	**E**	EARTH	**IR**	ISOLATION RELAY	**S1T**	HIGH AMBIENT FAN THERMOSTAT
B	ANALOG INPUT CONNECTIONS	**EFS**	EVAPORATOR FLOW SWITCH	**I/O CM**	INPUT / OUTPUT COMPRESSOR MODULE	**SPPB**	SINGLE POINT POWER BLOCK
C	COMPRESSOR	**EMI**	ELECTRO-MAGNETIC INTERF FILTER	**K1T**	TIME DELAY RELAY	**SW1**	UNIT START/STOP SWITCH
CB	CIRCUIT BREAKER	**EP**	EVAPORATOR PUMP CYCLING RELAY	**K1V**	SURGE RELAY	**SW2**	COMP MANUAL OFF SWITCH
CF	CONDENSER FLOW SWITCH	**EWI**	EVAPORATOR WATER INTERLOCKS	**K1R**	HARMONIC FILTER 1 RELAY	**SW3**	REMOTE START/STOP SWITCH
CH	CHILLER	**EXV**	ELECTRONIC EXPANSION VALVE	**K2R**	HARMONIC FILTER 2 RELAY	**SW4**	MODE SWITCH
CNT	CONTACTOR	**EXVB**	ELECTRONIC EXPANSION VALVE BOARD	**LR**	LINE REACTOR	**SW5**	EMERGENCY STOP SWITCH
CP	CONDENSER PUMP CYCLING RELAY	**EP&T**	ECONOMIZER PRESSURE & TEMPERATURE	**LBV**	LOAD BALANCE VALVE	**T**	CONTROL TRANSFORMER
CPB	CAPACITOR BANK	**F**	FUSE	**M1T**	HIGH AMBIENT FAN	**TB1**	TERMINAL BLOCK
CT	COOLING TOWER RELAY STAGE	**FB**	FUSE BLOCK	**OILR**	OPTICALLY ISOLATED LINE REPEATER		
CTB1	TERMINAL BLOCK	**GFP**	GROUND FAULT PROTECTOR	**PE**	PROTECTIVE EARTH	**TRTS**	TRAP REACTOR THERMAL SWITCH
CWI	CONDENSER WATER INTERLOCKS	**HF**	HARMONIC FILTER			**UC**	UNIT CONTROLLER
DS	DISCONNECT SWITCH	**ID**	DIGITIAL INPUT CONNECTIONS	**R1V**	SURGE ABSORBER	**UTB1**	TERMINAL BLOCK

SCHEMATIC SYMBOLS

- POWER SOURCE - DC
- POWER SOURCE - AC
- POWER BOX TERMINAL
- POWER BOX TERMINAL. FIELD CONNECTION
- UNIT BOX TERMINAL.
- UNIT BOX TERMINAL. FIELD CONNECTION
- FACTORY WIRING
- FIELD WIRING
- CABLE-TWISTED, SHIELDED & JACKETED PAIR
- FUSE
- RESISTOR
- THERMISTOR
- GROUND, EARTH
- GROUND, PROTECTED EARTH
- GROUND, SHIELDED EARTH
- SWITCH, THERMAL TEMPERATURE N.O.
- SWITCH, THERMAL TEMPERATURE N.C.
- SWITCH, PRESSURE DIFFERNETIAL
- SWITCH, PRESSURE N.O.
- SWITCH, PRESSURE N.C.
- SWITCH, N.O.
- SWITCH, N.C.
- SURGE ABSORBER
- RELAY COIL
- WIRE QUANTITY
- TRANSFORMER
- NOTE [SHEET - SEQUENCE]
- ANALOG, I/O
- TERMINAL BLOCK
- OPTION BOX

COMPONENT DESCRIPTION:		TERMINAL BLOCK CONNECTION:			NOTE:
MPC	MAIN MULTI POINT CONNECTION	CB1		CB2	1-1
GND	GROUND / EARTH	E		E	
RLA%	CHILLER RLA %	57	0-10VDC	71	1-2
CTBV	COOLING TOWER BYPASS VALVE	52	0-10VDC	71	
CTVFD	COOLING TOWER VFD	53	0-10VDC	71	
CTTR	COOLING TOWER TEMP RESET	56	0-10VDC	71	
CT1	COOLING TOWER RELAY STAGE 1	77		86	1-8 1-7
CT2	COOLING TOWER RELAY STAGE 2	78		86	
CT3	COOLING TOWER RELAY STAGE 3	79		86	
CT4	COOLING TOWER RELAY STAGE 4	80		86	
LWTR	LEAVING WATER TEMP RESET	51	4-20MA	70	1-2

COMPONENT DESCRIPTION:		TERMINAL BLOCK CONNECTION:			NOTE:
SPC	MAIN SINGLE POINT CONNECTION	DS1			1-1
APS	ALARM RELAY POWER SOURCE	84		81	1-8
PPS	PUMP RELAY POWER SOURCE	85		86	
ANO	ALARM NORMALLY OPEN	82		81	1-8 1-2
ANC	ALARM NORMALLY CLOSED	83		81	
EP1	EVAPORATOR WATER PUMP 1	73		86	1-8 1-6
EP2	EVAPORATOR WATER PUMP 2	74		86	
CP1	CONDENSER WATER PUMP 1	75		86	1-8 1-7
CP2	CONDENSER WATER PUMP 2	76		86	
EGPM	EVAPORATOR WATER GPM	59	4-20MA	71	1-2

DL% DEMAND LIMIT %

MS MODE SWITCH

EDPS EVAPORATOR WATER FLOW DIFFERENTIAL PRESSURE SWITCH

EPAS AUXILIARY SWITCHES IN EVAP WATER PUMP STARTERS

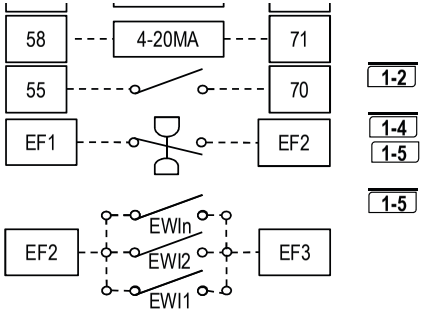

pLAN RS485

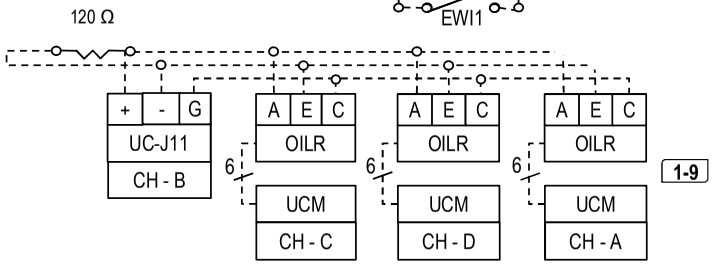

CGPM CONDENSER WATER GPM

SSS REMOTE START-STOP SWITCH

CDPS CONDENSER WATER FLOW DIFFERENTIAL PRESSURE SWITCH

CPAS AUXILIARY SWITCHES IN COND WATER PUMP STARTERS

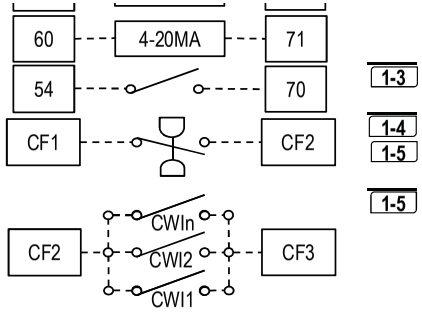

BAS NETWORK

CONNECTION FOR ALL BAS PROTOCOLS WILL BE AT THE INTERFACE SERIAL CARD INSTALLED IN THE CHILLER UNIT CONTROLLER
FOR ADDITIONAL INFORMATION REFER TO THE CORRESPONDING BAS PROTOCOL LITERATURE

BAS LITERATURE:
Modbus: IM 743
LonWorks: IM 735
BACnet Ethernet or IP: IM 837
BACnet MS/TP: IM 906
MT-II CUC Protocol: ED 15062

FIELD CONNECTION NOTES:

1-1 FIELD WIRING MUST BE SELECTED AND INSTALLED IN ACCORDANCE WITH THE NEC STANDARD OR LOCAL CODES. USE COPPER WIRES ONLY WITH AMPACITY BASED ON 75°C RATING
24VAC WIRING, OPTIONAL SENSOR AND DC WIRING MUST BE RUN SEPARATE FROM 115 OR MAIN VOLTAGE WIRING; FOR A MAXIMUM LENGTH OF 50FT THE MINIMUM WIRE GAUGE MUST BE 12GA FOR 115VAC AND 18GA FOR 24VAC AND VDC.

1-2 REFER TO CORRESPONDING UC SOFTWARE LITERATURE FOR PROGRAMMABLE LOGIC FEATURES

1-3 IF FIELD SUPPLIED DRY CONTACTS ARE USED FOR REMOTE START-STOP SWITCHING THEN REMOVE FACTORY INSTALLED JUMPER 569

1-4 EVAPORATOR AND CONDENSER FLOW SWITCHES ARE FACTORY INSTALLED AND MANDATORY; IF FIELD INSTALLED DIFFERENTIAL PRESSURE SWITCHES ARE REQUIRED THESE MUST BE INSTALLED ACROSS THE VESSEL AND NOT THE PUMP

1-5 ALL WATER PRESSURE DIFFERENTIAL SWITCHES AND AUXILIARY SWITCHES IN WATER PUMP STARTERS MUST BE SUITABLE FOR 24VAC LOW CURRENT APPLICATION
REMOVE ALL CORRESPONDING FACTORY INSTALLED MECHANICAL JUMPERS IF FIELD CONNECTIONS ARE MADE TO TERMINAL BLOCKS EF1, EF2, EF3, CF1, CF2 OR CF3

1-6 THIS OPTION WILL CYCLE THE WATER PUMP IN RESPONSE TO CHILLER DEMAND

1-7 THE CONDENSER WATER PUMP MUST CYCLE WITH THE CHILLER; FREE COOLING INSTALLATIONS MUST PROVIDE CONDENSER WATER ABOVE 60°F BEFORE STARTING

1-8 FIELD SUPPLIED RELAY COIL RATED FOR 24-230VAC WITH A MAXIMUM 25 VA LOAD

1-9 MULTIPLE CHILLERS CONNECTED VIA p-LAN MUST SHARE THE SAME UNIT CONTROLLER SOFTWARE REVISION; THE MAXIMUM WMC p-LAN SYSTEM IS FOUR CHILLERS
CH-A AND CH-B REPRESENT A DUAL CHILLER CONFIGURATION OR THE LONGEST PATH IN A THREE OR FOUR CHILLER SYSTEM; CH-C AND CH-D REPRESENT THE 3RD AND 4TH CHILLER
A SINGLE 120 OHM 5% MFR FIELD INSTALLED RESISTOR IS REQUIRED IN DUAL CHILLER CONFIGURATION.
THE NUMBER OF OILR MODULES REQUIRED (P/N 330276202) EQUALS THE NUMBER OF CHILLERS IN THE SYSTEM MINUS ONE. REFER TO SB 18-1101-B FOR INSTALLATION DETAILS
USE RS485 SPEC CABLE FOR THE pLAN PATH AND 6-WIRE PHONE CABLES WITH AN RJ11 CONNECTOR FOR OILR TO UC-J11 CONNECTIONS

910187226B 0D

Figure 21: Controller Box Wiring

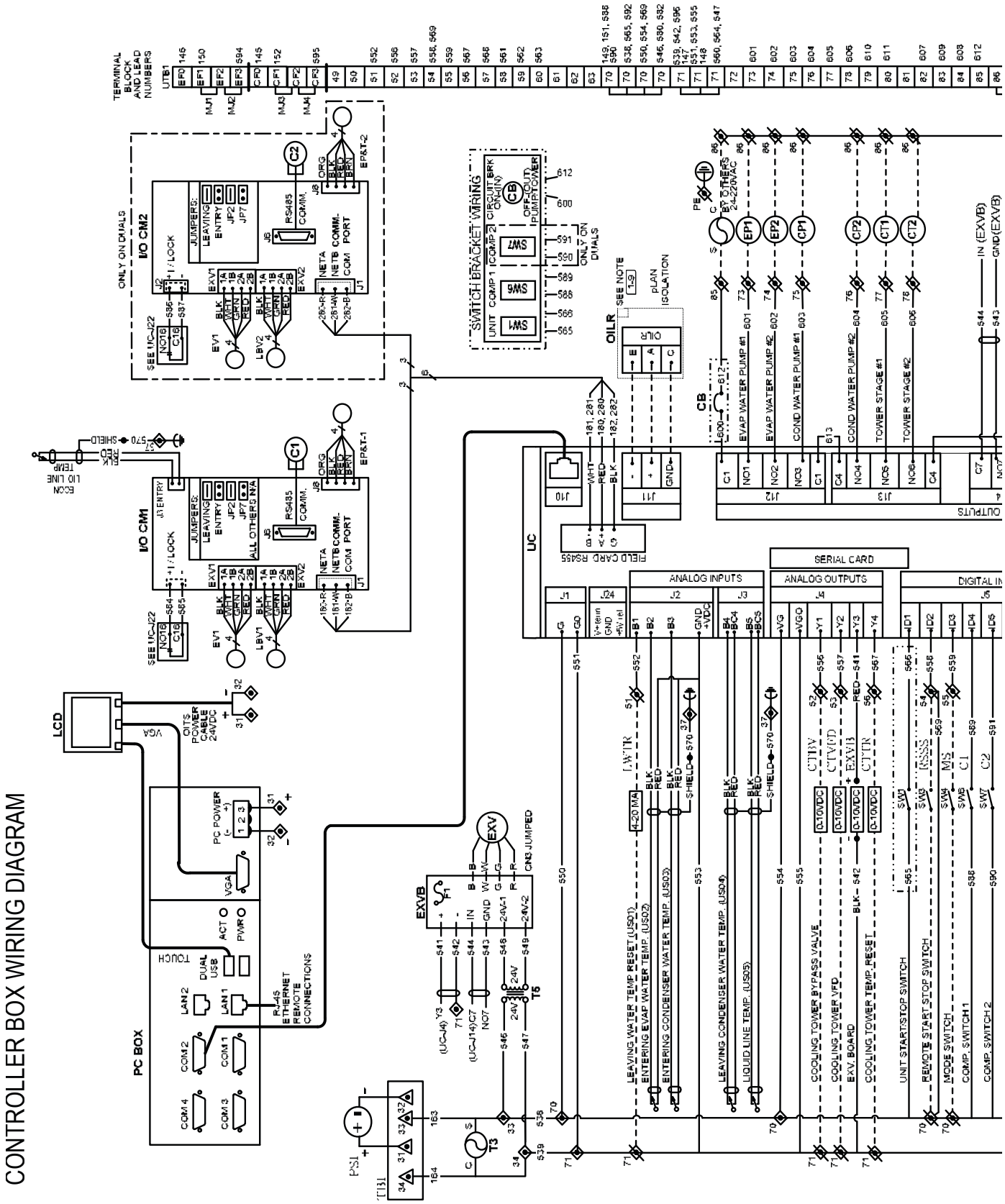

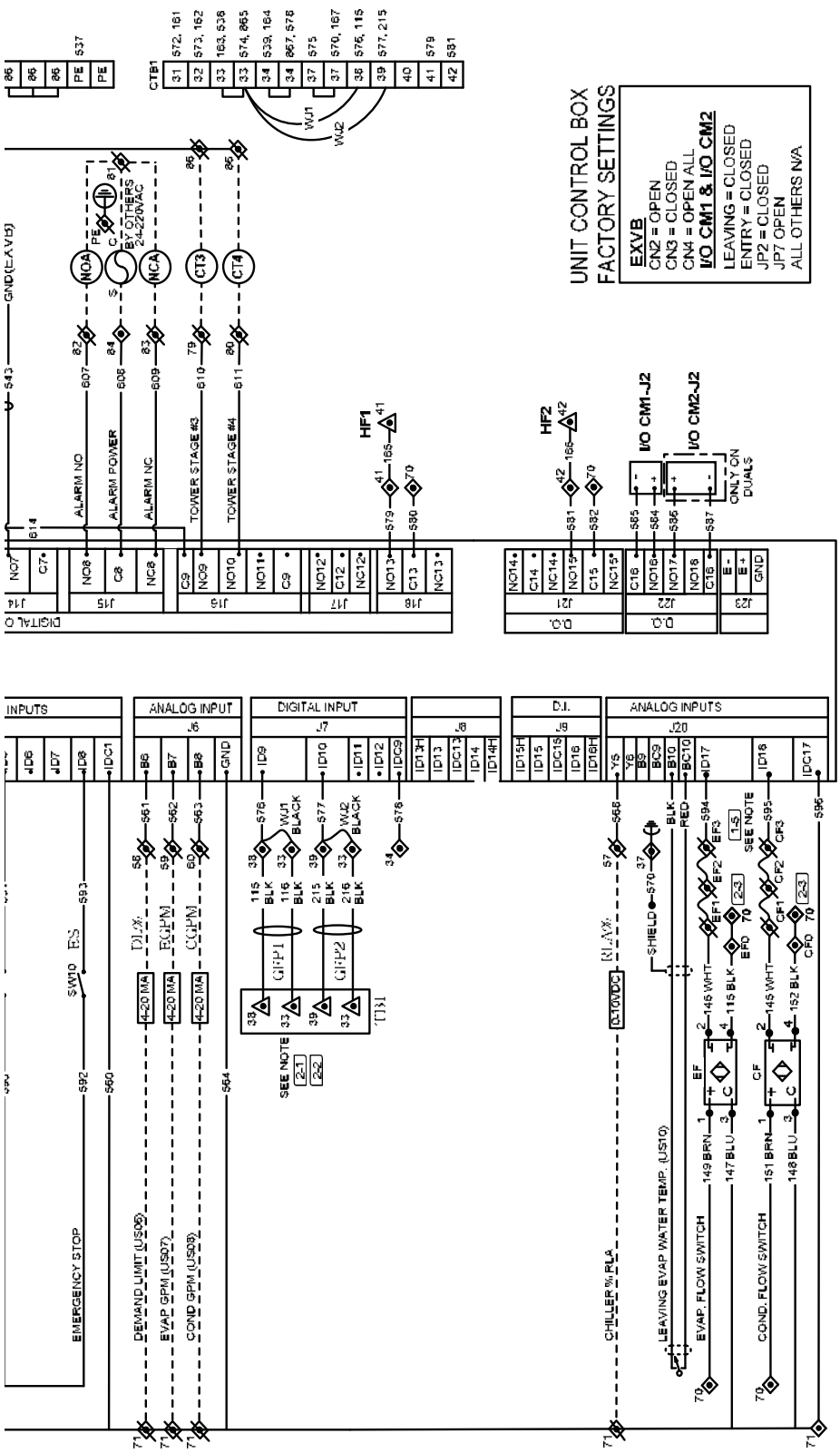

NOTES:

2-1 **UNIT CONTROL BOX FACTORY ASSEMBLY:**
JUMPERS **WJ1** AND **WJ2** MUST ONLY BE CONNECTED TO TERMINAL BLOCK **33**.

2-2 **CHILLER FACTORY ASSEMBLY:**
IF OPTIONAL **GFP1** IS USED THEN REMOVE JUMPER **WJ1**. OTHERWISE COMPLETE CONNECTION **WJ1** TO TERMINAL BLOCK **38**.
IF OPTIONAL **GFP2** IS USED THEN REMOVE JUMPER **WJ2**. OTHERWISE COMPLETE CONNECTION **WJ2** TO TERMINAL BLOCK **39**.

2-3 **CHILLER FACTORY ASSEMBLY:**
CONNECTION FROM EF0 TO 70 & CF0 TO 70 REQUIRED ONLY WHEN FLOW SWITCH #331893901 (IFM EFECTOR, INC # SIO558) IS USED.

910187226 B 0D

Figure 22: Power Box Single and Multi Point Wiring

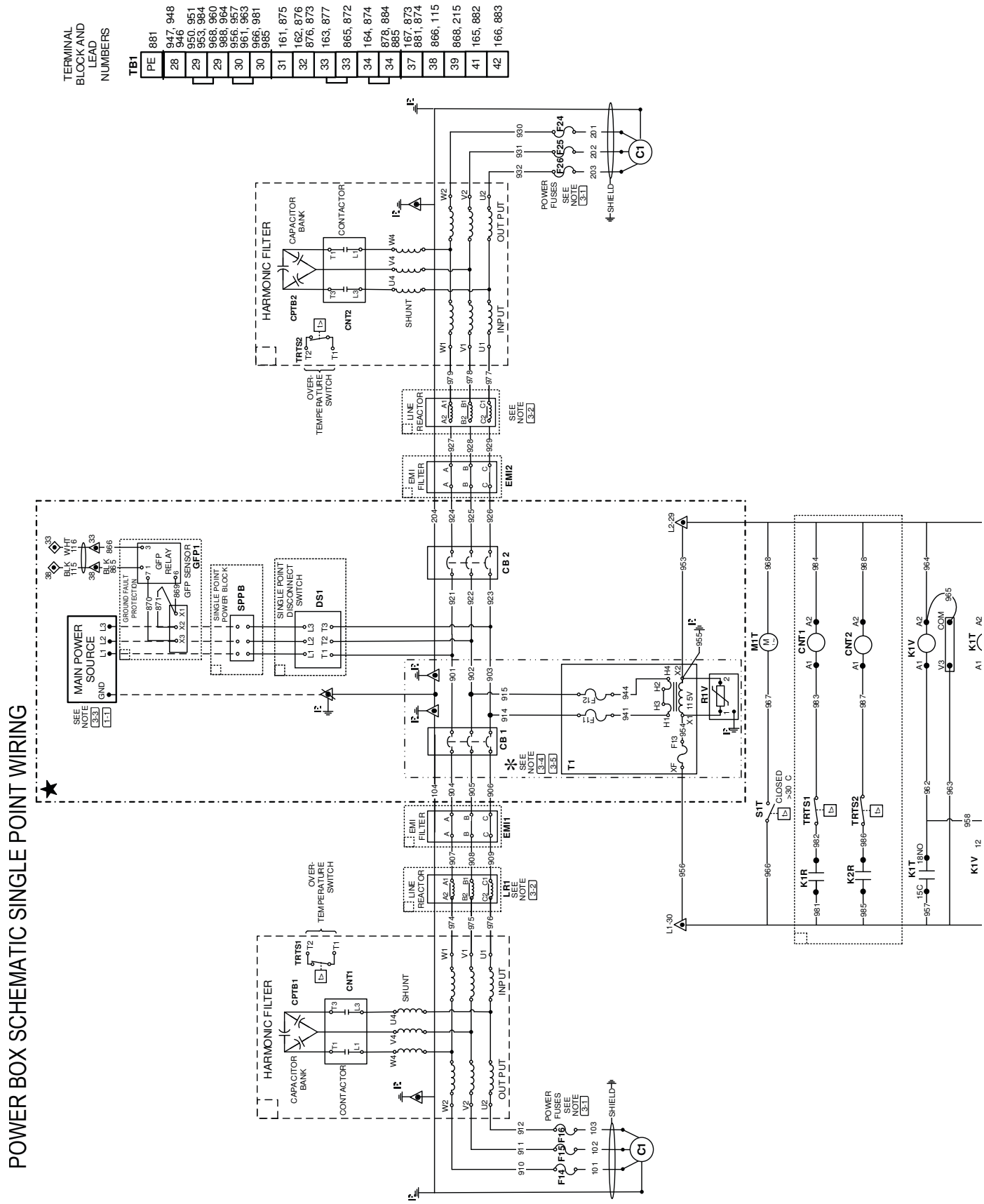

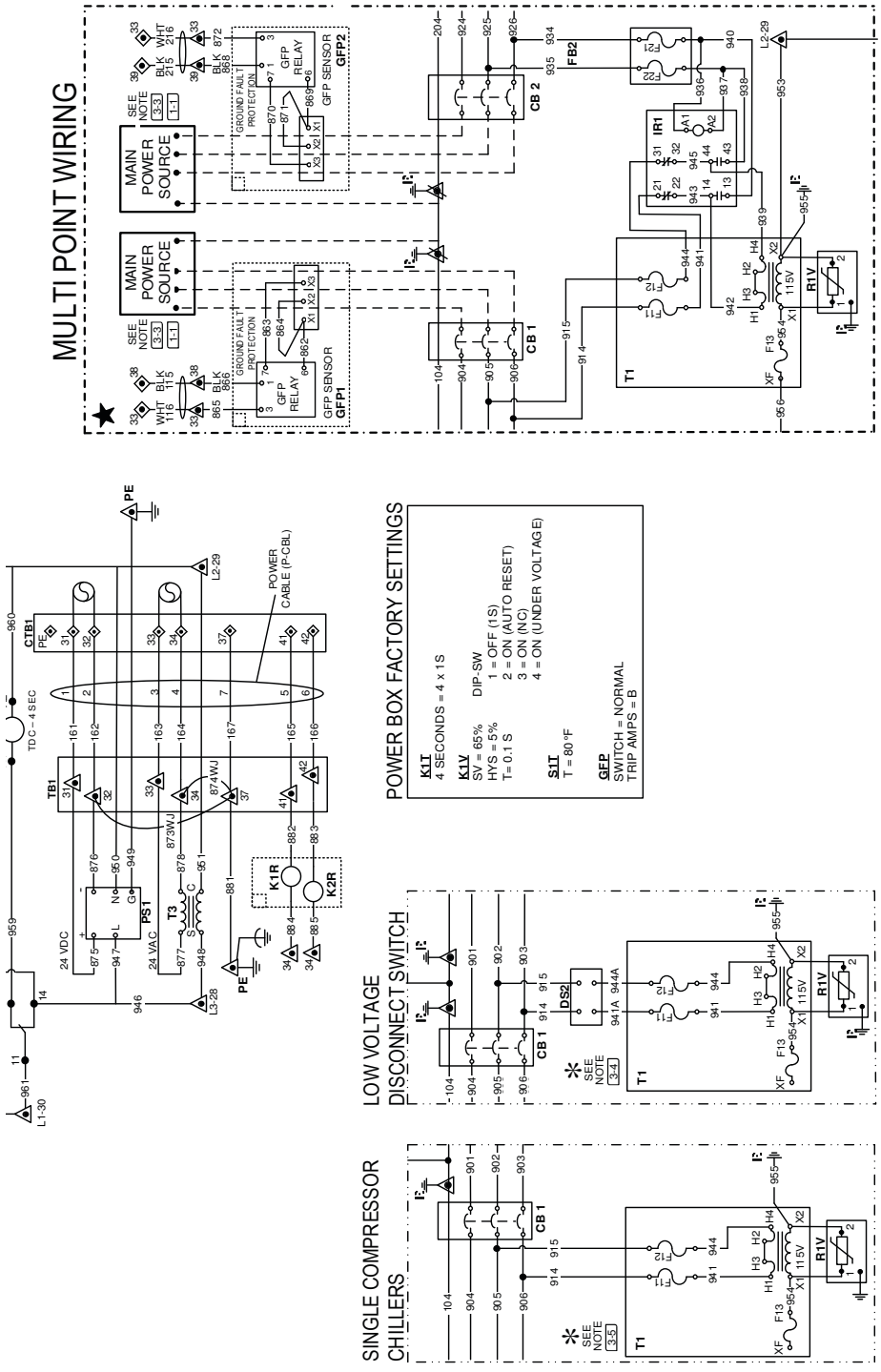

NOTES:

3-1 FUSES F14 TO F16 AND F24 TO F26 ARE LOCATED INSIDE TT300 COMPRESSORS; FUSES ARE LOCATED INSIDE THE POWER BOX FOR ALL OTHER MODELS

3-2 REMOVE LINE REACTORS IF HARMONIC FILTER OPTION IS USED.

3-3 REFER TO CHILLER DATA PLATE FOR MAIN POWER RATING

3-4 A CONTROL DISCONNECT SWITCH (DS2) IS REQUIRED FOR ALL SINGLE POINT POWER BOXES BUILD WITHOUT OPTIONAL MAIN SINGLE POINT DISCONNECT SWITCH

3-5 WIRES 914 AND 915 (UPSTREAM WIRING TO FUSES F11 AND F12) MUST BE CONNECTED TO DOWNSTREAM CIRCUIT BREAKER CB1 IN SINGLE COMPRESSOR UNITS ONLY

3-6 CIRCUIT #2 COMPONENTS FOR DUAL COMPRESSOR CHILLERS ONLY.

910187226 B 0D

Operator Responsibilities

It is important that the operator become familiar with the equipment and the system before attempting operation. During the initial startup of the chiller, the Daikin Applied technician will be available to answer any questions and instruct the proper operating procedures. It is recommended that the operator maintain an operating log for each individual chiller unit. In addition, a separate maintenance log should be kept of the periodic maintenance and servicing activities.

Operator Schools

Training courses for Magnitude® Centrifugal Maintenance and Operation are held through the year at the Daikin Learning Institute in Verona, Virginia. The school duration is three and one-half days and includes instruction on basic refrigeration, MicroTech® II controllers, enhancing chiller efficiency and reliability, MicroTech® II troubleshooting, system components, and other related subjects. For more information, visit us at www.DaikinApplied.com and click on Training or call the Training Department. Refer to the back cover of this document for contact information.

Sequence of Unit Operation

A general chiller sequence of operation is outlined below for Magnitude® Model WMC chillers. A separate sequence is provided for single and dual compressor units. Certain conditions and chiller alarms may alter this sequence, but the chiller's objective is to achieve the target temperature of the leaving water.

Single Compressor Units

The following sequence of operation applies to Magnitude® Model WMC chillers with a single compressor.

1. **Chiller enabled**

   With the chiller enabled via its onboard interlocks and selected external control source, it will start the evaporator pump and check for flow and chiller load.

2. **Water flow and load proven**

   Once evaporator flow has been confirmed and the chiller load proven, the sequence for starting the compressor will begin.

3. **Compressor shaft levitation and start**

   The magnetic bearings are activated and shaft rotation begins, as fault monitoring continues. The compressor moves into run state and ramps its speed, which is defined by the load. The compressor maintains its speed between the calculated minimum and maximum speed, while the Inlet Guide Vanes (IGV) modulate to full open.

4. **Condenser pump start**

   As positive Lift is developed, the condenser pump is commanded to start and water flow is confirmed.

5. **Compressor loading**

   As building load increases, the compressor will load up maximizing the Inlet Guide Vane (IGV) position and impeller speed. Maximum capacity at a given operating condition can be found either when the compressors have reached their maximum speed limit (Mechanical limitation) or when the compressors have reached the chiller's Rated Load Amperage (Electrical limitation).

6. **Compressor unloading**

   As load decreases, the compressor will unload to sustain the water temperature setpoint by reducing speed until the minimum speed limit has been reached. If further unloading is required, the IGV assemblies will close as required to maintain stable compressor operation.

7. **Chiller shutdown**

   The compressor will adjust capacity to manage the chiller load and will shut off when the stop delta temperature is acquired. Anytime the chiller is disabled, it will perform an orderly unload and compressor shutdown.

Dual Compressor Units

The following sequence of operation applies to Magnitude® Model WMC chillers with dual compressors.

1. **Chiller enabled**

   With the chiller enabled via its onboard interlocks and selected external control source, it will start the evaporator pump and check for flow and chiller load.

2. **Water flow and load proven**

   Once evaporator flow has been confirmed and the chiller load proven, auto lead-lag logic will determine which compressor to start as the Lead.

3. **Compressor shaft levitation and start**

   The magnetic bearings are activated and shaft rotation begins, as fault monitoring continues. The compressor moves into run state and ramps its speed, which is defined by the load. The compressor maintains its speed between the calculated minimum and maximum speed, while the Inlet Guide Vanes (IGV) modulate to full open.

4. **Condenser pump start**

   As positive Lift is developed, the condenser pump is commanded to start and water flow is confirmed.

5. **Lead compressor operation**

   The Lead compressor will adjust capacity to manage the chiller load. As the Lead compressor approaches its maximum capacity it will assess the need for the Lag compressor. If the Lag compressor is needed, the Lead compressor will signal the Lag compressor to start, and may adjust its capacity to assist the Lag compressor from start to vanes fully open.

6. **Lag compressor start**

   Once started and the vanes have fully opened, the Lag compressor will quickly ramp up to balance the chiller load between the two compressors.

7. **Dual compressor loading**

   As building load increases, the compressors will load up maximizing the Inlet Guide Vane (IGV) position and impeller speed. Maximum capacity at a given operating condition can be found either when the compressors have reached their maximum speed limit (Mechanical limitation) or when the compressors have reached the chiller's Rated Load Amperage (Electrical limitation).

8. **Dual compressor unloading**

   As load decreases, the compressors will unload to sustain the water temperature setpoint by reducing speed until the minimum speed limit has been reached. If further unloading is required, the IGV assemblies will close as required to satisfy the load.

9. **Staging down to one compressor running**

   With the chiller running two compressors and the building load reducing to the point that one compressor can carry the load, auto lead-lag logic will again determine which compressor to shutdown. However, the shutdown will not occur until the water temperature is more than a degree below setpoint.

10. **Chiller shutdown**

    The remaining compressor will adjust capacity to manage the chiller load until the load increases to the point where another compressor is needed, or the load reduces below the minimum capacity of one compressor and the leaving water temperature goes below setpoint and reaches the stop delta temperature. Anytime the chiller is disabled, it will perform an orderly unload and shutdown both compressors.

Unit Enabling/Disabling

There are multiple switches that will enable and disable the chiller and its compressors (see Figure 3 on page 5 for location of the switch bracket):

1. Unit Switch - The top switch on the switch bracket that is mounted inside the control panel.
2. Compressor 1 Switch - Located underneath the Unit Switch on the switch bracket.
3. Compressor 2 Switch - Located underneath the Compressor 1 Switch on the switch bracket. On dual compressor units only.
4. External Switch - Located on the outer, left side of the control box.
5. Remote Switch - Optional. Replaces a jumper between Field Terminals 54 and 70 (see "Figure 20: Wiring Index" on page 22).

The switches listed above work in conjunction with the "Control Source" that is selected in the HMI via the MODES Setpoint Screen using Setpoint button #3. (See Figure 48 and Table 16 on page 47.) The three options for "Control Source" are:

1. Switches - This is the default mode. This mode will ignore BAS commands.
2. Local - When this mode is set, a STOP button and an AUTO button will appear at the top of the HMI screens, as shown in Figure 24 on page 31. **This mode will ignore all functionality of a connected Remote Switch**. It will also ignore BAS commands.
3. BAS - This mode adds BAS capability to the Switches functionality.

Enabling and disabling the unit and its compressors using the switches in conjunction with the selected "Control Source" are discussed next.

Enabling

To enable the chiller and its compressors when the "Control Source" is "Switches" or "BAS," all rocker switches (three rocker switches for single compressor units, four rocker switches for dual compressor units) and the Remote Switch, if included, need to be closed (in the ON position).

If the "Control Source" is set to "Local" and a remote switch is being used, the position of the remote switch is not ignored. This means the rocker switches and remote switch need to be closed. Once these rocker switches are closed, press the AUTO button on the HMI to enable the chiller in "Local" mode.

Disabling

Each of the four switches located on the unit have a different functionality in terms of disabling. The descriptions below apply if the "Control Source" on the HMI MODES Setpoint Screen is set to "Switches" or "BAS."

1. Unit Switch- When placed in the OFF position while the chiller is running, the Unit Switch will shutdown the chiller in a normal controlled sequence and will stop each compressor that is running. This switch will leave the entire chiller disabled until it is set in the ON position.
2. Compressor 1 Switch - When placed in the OFF position, this switch prevents Compressor 1 from being used in the normal auto-sequencing of the compressors. If Compressor 1 is running when this switch is placed in the OFF position, the compressor will perform a "rapid stop" different from the stop caused from placing the Unit Switch in the OFF position.
3. Compressor 2 Switch - This switch functions in the same manner as the Compressor 1 Switch but it controls Compressor 2 instead. This switch is only applicable to dual compressor units.
4. External Switch - If placed in the OFF position, this switch will cause both compressors to do a "rapid stop" together. In other words, putting this switch in the OFF position has the same effect as placing both the Compressor 1 Switch and the Compressor 2 Switch in the OFF position. The External Switch will leave the unit disabled until it is placed in the ON position.
5. Remote Switch - This switch will disable the chiller in a similar manner as the Unit Switch.

If the “Control Source” on the HMI MODES Setpoint Screen is set to “Local,” press the STOP button on the HMI to disable the chiller. This method of disabling will cause the chiller to act in a similar manner as when it is disabled using the Unit Switch in the “Switches” or “BAS” mode.

Economizer Control

The economizer can be activated by enabling control of the economizer expansion valves if equipped. The economizer expansion valve logic will optimize the performance of the economizer while also preventing compressor interstage liquid refrigerant carryover. The logic also manages dual compressor operation by closing the economizer expansion valve that feeds the inactive compressor to prevent refrigerant bypass. The economizer will turn completely off when it is no longer efficient to economize, or when the circuit is not in the run state.

Machine Interface Screen (HMI)

The following sections outline the operation of the HMI panel.

HMI On/Off

The HMI is turned on/off with a switch located at the lower front of the display panel. Screen control buttons are located to either side of it and elicit on-screen prompts when pressed. The HMI is equipped with a screen saver that can be configured to initiate at 10,30 and 60 second increments. If the screen is black, touch it first to be sure it is on before using the ON/OFF button.

Chiller Operation Without the HMI

The Human Machine Interface touch screen (HMI) communicates with the controller, displaying data and transmitting touch screen inputs to the controllers. It does no actual controlling and the chiller can operate without it. Should the touch screen become inoperable, no commands are necessary for continuing unit operation. All normal inputs and outputs will remain functional. The unit controller can be used to view operational data, to clear alarms, and to change setpoints, if necessary. See "The Controller" section starting on page 57 for more information.

Navigation Summary

The Home View Screen, see Figure 24 on page 31, is usually left on. This screen contains the AUTO and STOP buttons used to start and stop the unit when in “Local” control mode. Other groups of screens can be accessed from the Home View Screen by pressing one of ten buttons on the bottom of every screen:

- EVAPORATOR
- COMPRESSOR
- CONDENSER
- EXPANSION
- TOWER
- SETTINGS
- TREND
- ALARM
- OPERATOR

Additional details and screen captures can be found on pages 35-49.

Figure 23: HMI Screen Layout

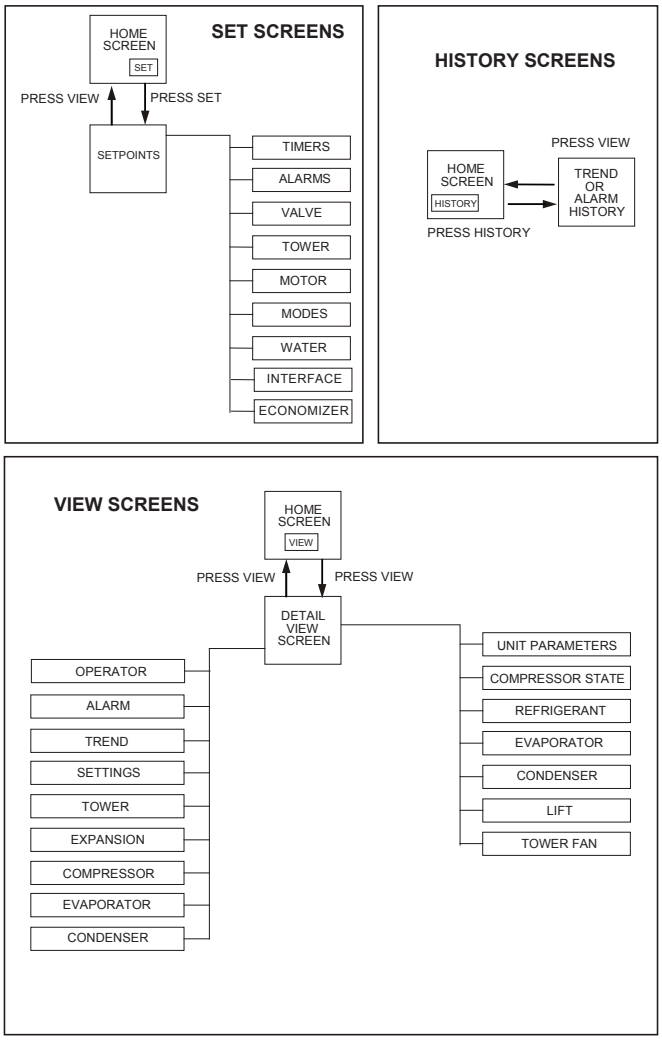

VIEW Screens

View screens are used for looking at unit status and conditions.

Home View Screen

The Home View Screen (Figure 24) shows the basic operating condition of the chiller and is the screen that is normally left on. Note that the chiller displayed on this screen, as well as on all other screens that display an image of the chiller, will show either one or two compressors depending on the chiller model.

Figure 24: Home View Screen

Superimposed on the Home View Screen is:

(I) <u>Alarm</u>

- An ALARM button will display a red dot should an alarm occur. This ALARM button will appear on most screens in the case of an alarm. The ALARM button is displayed on the bottom of the screen.
- Any type of alarm will cause the ALARM button to highlight. Pressing the ALARM button will bring up the Active Alarms Screen (Figure 59 on page 54) to view the alarm details. For more information on alarms, see page 52 through page 57.

(II) <u>Information</u>

- Chilled water setpoint (ACTIVE LWT SETPOINT)
- Entering and leaving evaporator water temperatures
- Entering and leaving condenser water temperatures
- Percent unit RLA
- UNIT STATUS, which is MODE followed by STATE followed by the SOURCE that is the device or signal that created the STATE. The possible combinations are shown in Table 8.

Table 8: UNIT STATUS Possibilities

MODE	STATE	SOURCE
COOL	OFF	Manual Switch
	SHUTDOWN	Remote Switch
	AUTO	Local
		BAS Network

- COMPRESSOR STATUS, shown for each unit compressor (#1 only for single compressor units, both #1 and #2 for dual compressor units), is MODE followed by STATE followed by the SOURCE that is the device or signal that created the STATE. The possible combinations are shown in Table 9.

Table 9: COMPRESSOR STATUS Possibilities

Complete STATUS Text (in priority sequence)	Notes
OFF Manual Switch	Reason for the compressor being off
OFF Compressor Alarm	
OFF Unit State	
OFF Evap Flow/Re-circulate	
OFF Start to Start Timer=xxx	
OFF Stop to Start Timer=xxx	
OFF Staging (Next ON)	
OFF Awaiting Load	
RUN Unload Vanes-Max Amps	Overrides water temperature command
RUN Hold Vanes-Max Amps	
RUN Load	Normal operation
RUN Hold	
RUN Unload	
SHUTDOWN Unload	Unloading during the shutdown sequence

NOTE: Timer countdown values will be shown where “xxx” is shown in Table 9.

(III) <u>Action Buttons</u>

- Chiller Control: AUTO button (normal start) and STOP button (normal shutdown). **These buttons are only visible and active when the control is in the “Local” mode.** For display purposes, the rest of the screen images presented in this manual will not show the AUTO and STOP buttons.
- TREND button: Toggles between the Trend History Screen (Figure 55 on page 51) and the Alarm History Screen (Figure 56 on page 52).
- DETAIL tab: Shows details about the unit status and conditions. Pressing this button will toggle between the Home View Screen (Figure 24) and the Detail View Screen (Figure 25).
- SETTINGS button: Toggles between the Setpoint Screens (descriptions start on page 33) that are used for changing setpoints and the Service Screen (Figure 51 on page 49).

Detail View Screen

Pressing the DETAIL tab on the top of the Home View Screen accesses the Detail View Screen, shown in Figure 25. The Detail View Screen can also be accessed by pressing the VIEW button from any other screen that contains the VIEW button.

Figure 25: Detail View Screen

Data for all compressors is shown simultaneously on the Detail View Screen. If the unit is a dual compressor unit, pressing the COMP button in the lower-left hand corner of the screen will generate additional statuses.

Various information will appear on the right side of the Detail View Screen by pressing available buttons. For example, pressing the COMP button will bring up a display of the Compressor State Information (Figure 26) on the right side of the Detail View Screen. Use the COMP button to toggle between the two compressors' data.

Figure 26: Compressor State Information

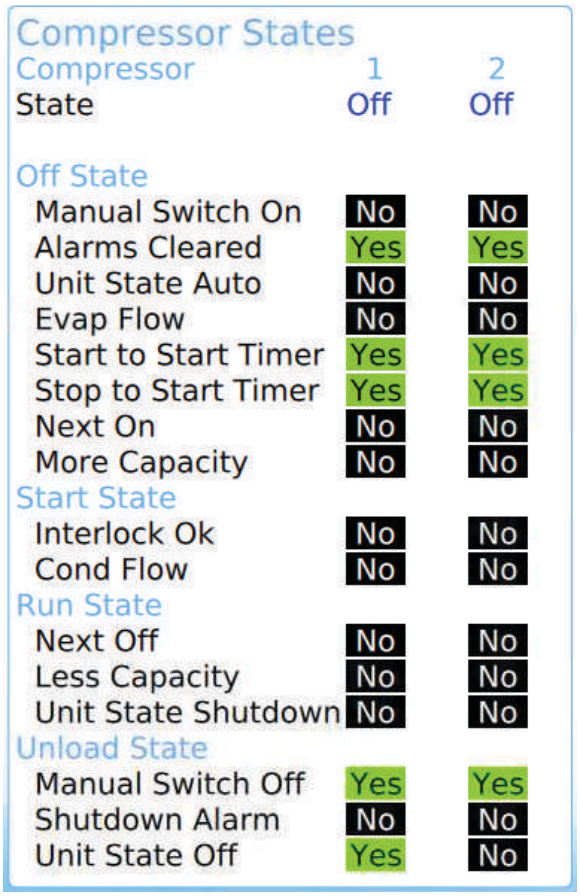

The Compressor State Information is basically a compilation of the events that the chiller sequences through at startup. A green light indicates that a particular sequence requirement has been satisfied. It is recommended that this information be viewed during the startup sequence. One can see the requirements light up as they are met and quickly see why a non-start may have occurred. For instance, the “Evap Flow OK” item will light when the evaporator flow switch is closed by flow. The bottom sections (from “RUN” down) of the Compressor State Information are in effect during the shut down process. The sequence transitions back to OFF at this point and the OFF light will be illuminated.

Pressing the COMP button on the Detail View Screen displays the status of the compressor digital inputs and outputs, as shown in Figure 27, on the right side of the Detail View Screen. For dual compressor units, use the COMP button to toggle between the two compressors’ data. Many of the inputs and outputs shown in the Compressor Inputs/Outputs Information will also appear under the Compressor State Information (Figure 26) since they are part of the startup sequence and define the compressor state at any given time.

Figure 27: Compressor Inputs/Outputs Information

Digital	
Manual Switch	Off
Evap Flow	Off
Cond Flow	Off

The Power screen can be accessed by pressing the COMP button and will display the current, voltage, and power of the chiller, as shown in . Pressing the EVAP or COND buttons on the Detail View Screen will display pertinent vessel temperatures and pressures. The Evaporator Information and Condenser Information are shown in Figure 28 and Figure 29, respectively.

Power Information

Power		
Compressor	1	2
Current	81 amps	77 amps
Voltage	446 volts	450 volts
KiloWatts	540 kW	672 kW
KiloWatts-Hrs	0 kWHrs	0 kWHrs

Figure 28: Evaporator Information

Water		
Evap Entering Water Temp		50.5 °F
Evap Leaving Water Temp		45.1 °F
Delta Evap Water Temp		5.0 Δ°F
Pump State		Run
Pump 1		PUMP ON
Pump 2		PUMP OFF
Refrigerant		
Liquid Line		53.5 °F
Liquid Line Approach		3.4 °F
Subcooling		0.0 Δ°F
Compressor	1	2
Pressure	59.9 PSI	54.4 PSI
Saturated Temp	48.1 °F	49.0 °F
Suction Superheat	3.2 Δ°F	5.2 Δ°F

Figure 29: Condenser Information

Water		
Cond Entering Water Temp		84.0 °F
Cond Leaving Water Temp		86.6 °F
Delta Cond Water Temp		9.8 Δ°F
Pump State		Run
Pump 1		PUMP ON
Pump 2		PUMP OFF
Refrigerant		
Liquid Line		53.2 °F
Liquid Line Approach		3.4 °F
Subcooling		0.0 Δ°F
Compressor	1	2
Pressure	56.2 PSI	69.0 PSI
Saturated Temp	49.0 °F	49.4 °F
Disch Superheat	2.3 Δ°F	5.8 Δ°F

Pressing the COND or EVAP button on the Detail View Screen displays the unit digital inputs, digital outputs, and analog outputs. Note that operation of the condenser and evaporator water pumps and operation of the tower constitute most of the data flow. An illuminated block indicates that either an input or output signal exists.

View Menu Screen

As with the Detail View Screen, information will appear on the right side of the View Menu Screen by pressing available buttons. Much of the available information is the same as what is found on the Detail View Screen. For example, pressing the Compressor STATE, Compressor I/O, Unit I/O, EVAP, or COND buttons will display the same information as what is available from the Detail View Screen. Reference the Information figures in the "Detail View Screen" section starting on page 32 for more details.

SET Screens

The Setpoint Screens on the Machine interface Touch Screen (HMI) are used to input the many setpoints associated with equipment of this type. MicroTech® II provides a simple method for accomplishing this. (Note that if the HMI is unavailable, the controller can be used to change setpoints.) Appropriate setpoints are factory set and checked by a Daikin Applied service representative during commissioning; however, adjustments and changes are often required to meet job conditions. Certain settings involving pumps and tower operation are field set.

Pressing the Settings button found on almost every screen accesses the last Setpoint Screen used or the Service Screen, whichever of the two was used last. When in any Setpoint Screen, pressing the SET button again will toggle to the Service Screen, shown in Figure 51 on page 49. A typical Setpoint Screen is displayed in Figure 30 below.

Figure 30: A Typical Setpoint Screen

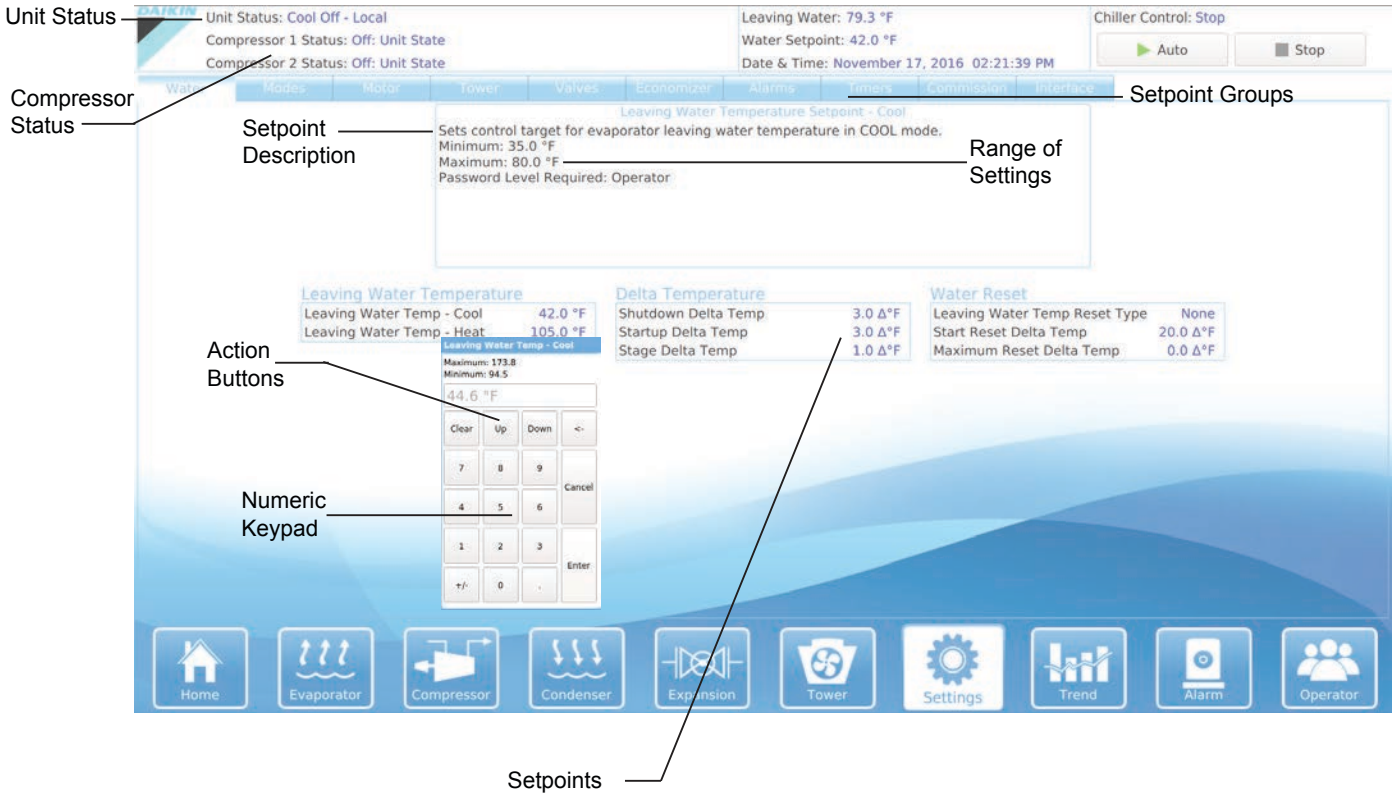

Figure 30 shows the WATER Setpoint Screen. The various setpoint groups are in a column on the right side of the screen. Each button contains a number of setpoints grouped together by similar content. The WATER button, for example, contains various setpoints relating to water temperature setpoints.

NOTE: Some setpoints that do not apply to a particular unit application may still be listed on the screen but will be grayed out. They will be inactive and can be ignored.

The numbered Setpoint Selection buttons are pressed to select a particular setpoint. The selected setpoint will appear in blue on the screen and a description of it (with the range of available settings) will appear in the upper left-hand box.

Procedure for Changing a Setpoint

A list of setpoints along with their default value, available setting range, and password authority can be found in the tables under each Setpoint Screen, starting on page 36. Follow the steps listed below in order to change a setpoint.

⚠ CAUTION

Many setpoints are interactive. Changes may have an adverse effect on chiller operation. Only trained operators should be allowed to change chiller setpoints.

1. Press the applicable Setpoint Group. (A complete explanation of setpoint content of each group follows this section.)
2. Select the desired setpoint by pressing the numbered Setpoint Selection button.
3. Press the CHANGE button to change a setpoint value. The Keyboard Screen will be turned on automatically to facilitate entering the password.
4. Input the appropriate password number. (Use 100 for operator level or 2001 for manager level. The technician level password is only provided to Daikin Applied technicians) There is a small delay between pressing the keypad and recording the entry. Be sure that an asterisk appears in the window before pressing the next number.
5. After inputting the password on the Keyboard Screen, press ENTER to return to the Setpoint Screen. The password will remain active for 15 minutes after initiation and does not need to be re-entered during this period.
6. Press CHANGE again on the Setpoint Screen. The right side of the screen will become inactive (the background will turn blue). The Numeric Keypad and Action buttons in the lower left-hand corner of the screen will become active (the background will turn green).
7. Setpoints with numeric values can be changed in two ways:
   - Select the desired value by pressing the numbered buttons on the Numeric Keypad. Press ENTER to enter the value or CANCEL to cancel the transaction.
   - Press the UP or DOWN button to increase or decrease the value displayed. Press ENTER to enter the value or CANCEL to cancel the transaction.

   Some setpoints are selectable text rather than numeric values. For example, LWT Reset Type (Setpoint 7) on the WATER Setpoint Screen (Figure 49 on page 48) can be “None” or “4-20 ma.” The selection can be made by toggling between choices using the UP or DOWN button. If dashed lines appear in the setpoint window it means that toggling in that direction can go no further, so reverse direction. Press ENTER to enter the choice or CANCEL to cancel the transaction.

   Once CHANGE is selected, the CANCEL or ENTER buttons must be pressed before another setpoint can be selected.
8. Additional setpoints can be changed by selecting another setpoint on the screen using the Setpoint Selection buttons or by selecting an entirely new group of setpoints using the Setpoint Group buttons.

Explanation of Setpoints

There are ten setpoint groups shown on the Setpoint Screens:

1. TIMERS, sets timers such as start-to-start, etc.
2. ALARMS, sets the limit and shutdown alarms.
3. VALVE, sets the parameters for operation of an optional field-installed tower bypass valve.
4. TOWER, selects the method of controlling the cooling tower and sets the parameters for fan staging/VFD.
5. MOTOR, selects motor related setpoints such as amp limits. Also has maximum and minimum rate of change of chilled water temperature.
6. MODES, selects various modes of operation such as control source, multiple compressor staging, pump staging, BAS protocol, etc.
7. WATER, sets leaving water temperature setpoint, start and stop delta-T, resets, Templifier settings, etc.
8. INTERFACE, sets software and administrative options.
9. COMMISSION, sets parameters and component configurations.
10. ECONOMIZER, sets available options for economizer if unit is equipped

Each of the ten setpoint groups are detailed in the following pages.

TIMERS Setpoints

Figure 31: TIMERS Setpoint Screen

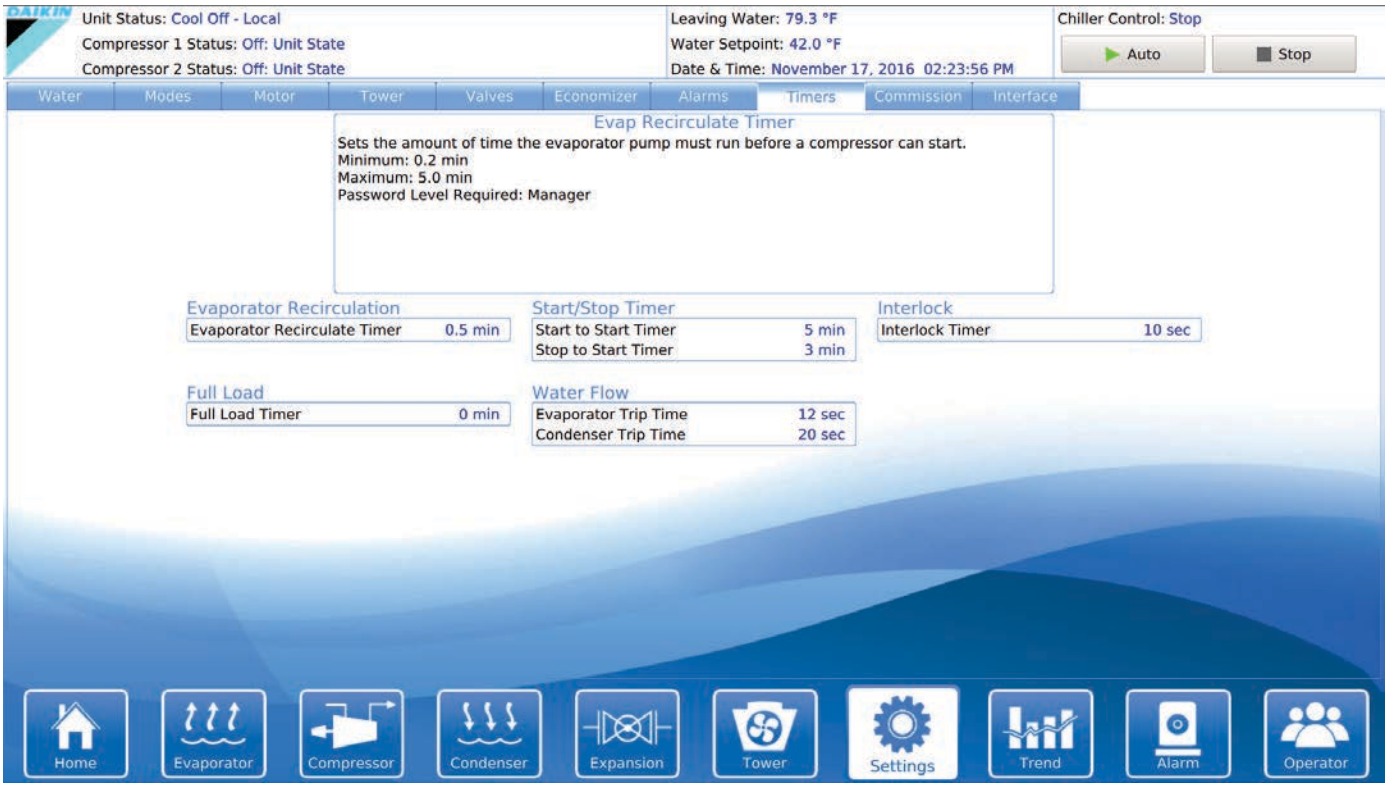

Table 10: TIMERS Setpoint Settings

Description	Default	Range	Password	Comments
Full Load Timer	300 sec	0 to 999 sec	M	Time compressor must load (without unloading) before vanes are considered fully open. This setpoint does not apply to this model chiller.
Interlock Timer	10 sec	10 to 240 sec	T	Maximum time allowed before interlock confirmation from compressor
Stop-Start Timer	3 min	1 to 20 min	M	Time from when compressor stops to when it can restart
Start-Start Timer	5 min	2 to 60 min	M	Time from when compressor starts to when it can start again
Evap Recirculate Timer	30 sec	0.2 to 5 min	M	Time that evaporator pump must run before compressor start
Evaporator Trip Time	12 sec	1 to 20 sec	M	Sets the suction pressure trip point if the pressure rises within 5psi
Condenser Trip Time	20 sec	1 to 20 sec	M	Sets the discharge pressure trip point if the pressure rises within 5psi

NOTE: In Table 10 and in the rest of the Setpoint tables on the following pages, the letters in the Password column refer to the following:

- O = Operator Level (The password number for operator level is 100.)
- M = Manager Level (The password number for manager level is 2001.)
- T = Technician Level (the password number for technician level is only provided to technicians who have completed Service training with the Daikin Learning Institute.)

ALARMS Setpoints

Figure 32: ALARMS Setpoint Screen

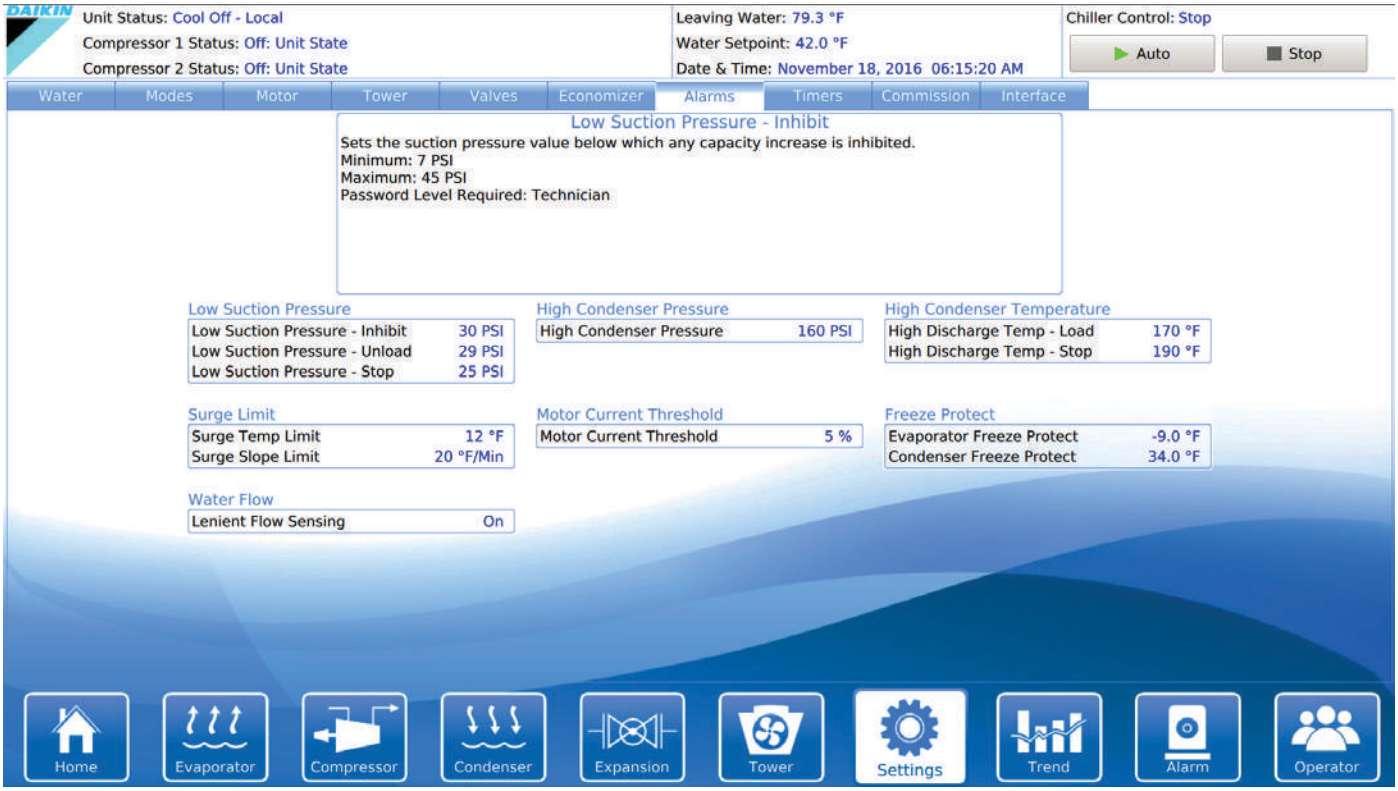

Table 11: ALARMS Setpoint Settings

Description	Default	Range	Password	Comments
Condenser Freeze Protect	34.0 °F	-9.0 to 45.0 °F	T	Minimum condenser saturated temperature to start pump
Evaporator Freeze Protect	34.0 °F	-9.0 to 45.0 °F	T	Minimum evaporator saturated temperature to start pump
Motor Current Threshold	10%	1 to 20%	T	Min %RLA to consider that the is motor off
Surge Slope Limit	20 °F/min	1 to 99 deg F/min	T	Surge temperature (ST) slope value above which alarm occurs. Active only if ST>SP7 at start
Surge Temperature Limit	12 °F	2 to 45 °F	T	At start, Surge Temp (ST) is compared to this SP. Alarm at ST>2x SP.
High Discharge Temp-Stop	190 °F	120 to 240 °F	T	Max discharge temp to shut down compressor
High Discharge Temp-Load	170 °F	120 to 240 °F	T	Sets discharge temp above which a forced capacity increase occurs
High Discharge Pressure	140 psi	120 to 240 psi	T	Max discharge pressure, stop compressor
Low Suction Pressure, Stop	25 psi	5 to 45 psi	T	Min suction pressure – stop compressor
Low Suction Pressure-Unload	29 psi	6 to 45 psi	T	Min suction pressure – unload compressor
Low Suction Pressure-Inhibit	30 psi	7 to 45 psi	T	Min suction pressure – inhibit loading
Lenient Flow Sensing	On	Off/On	T	On- reduction in unit trips by detecting a loss of flow signal (>5 Sec)

NOTE: The setpoints listed in Table 11 should only be changed by a Daikin Applied technician. Contact a Daikin Applied service representative for more information.

Economizer Setpoints

Figure 33: Economizer Setpoint Screen

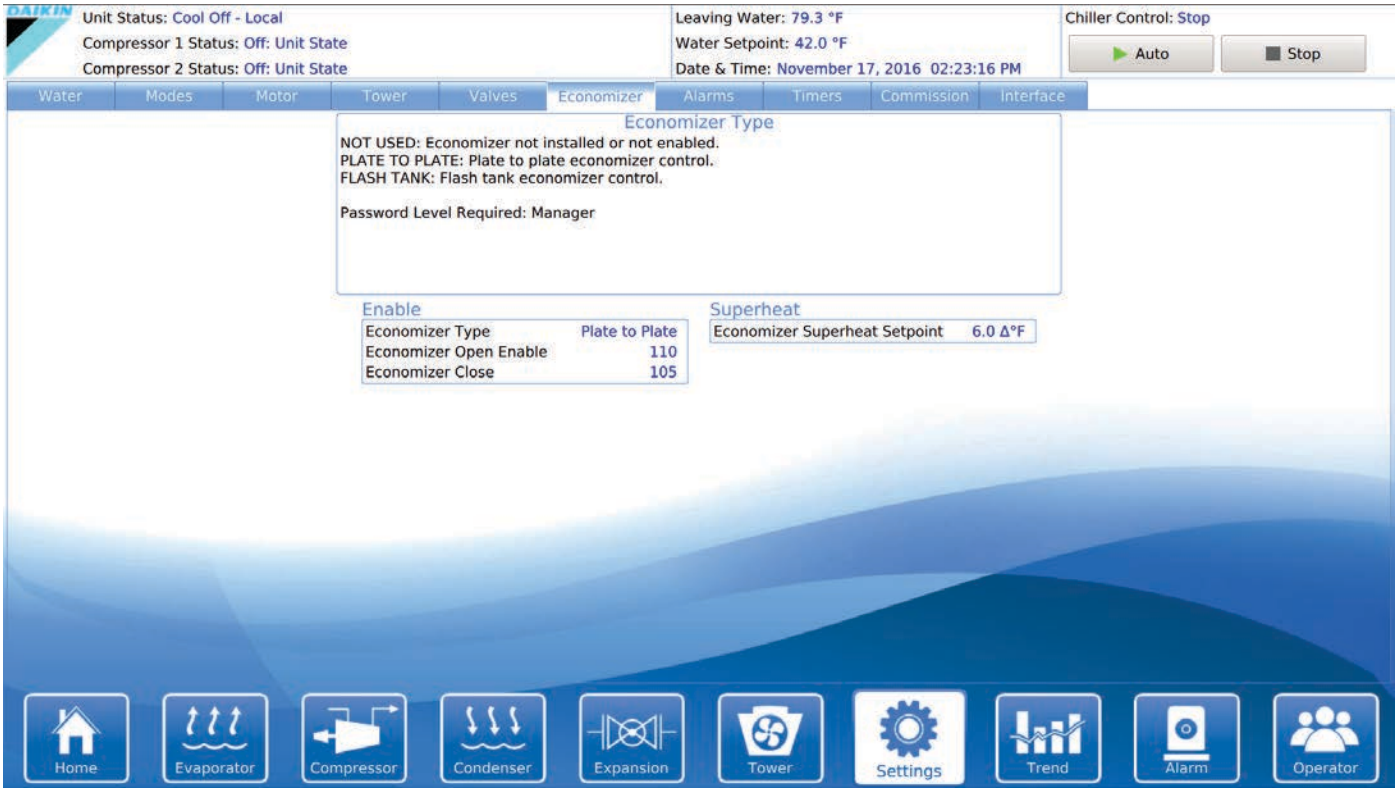

Table 12: Economizer Setpoint Settings

Description	Default	Range	Password	Comments
Economizer Type	Plate to Plate	Not Used, Plate to Plate, Flash Tank	M	Specifies one of two economizer types (plate to plate or flash tank) if unit is equipped with economizer.
Economizer Open Enable	110	100-120	M	Select setpoint that will enable economizer to open
Economizer Close	105	100-120	M	Select setpoint that will enable economizer to close
Economizer Superheat Setpoint	6.0 Δ°F	1-10	M	Select setpoint for economizer superheat control

Bypass VALVE Setpoints

Figure 34: Bypass VALVE Setpoint Screen

Table 13: Bypass VALVE Setpoint Settings

Description	Default	Range	Password	Comments
Temp - Max Start Position [SP11]	90 °F	0 to 100 °F	T	Condenser EWT at which valve should be open to tower. Valve position is set to SP10
EXV Valve Start Position	Closed	Open-Closed	T	Select valve position to either open or closed.
Release at LR	1.00	1-5	T	Lift Ratio at which the EXV start pos is released for normal control
Unload Target LR	2.2	1-5	T	Target to which the chiller will unload to stage on another comp. It could be a Lift Ratio or a Lift pressure.
Stage Lift Type	Ratio	Ratio-Pressure	T	Select either Ratio or Pressure as lift type
Stage EXV Control	Auto	0-100%	T	Hold at selected percentage
EXV Duration	0 sec	0-60 sec	T	Time the EXV position is held during staging event.
Start Ready + Next-On	1	0-1	T	Configures the Ready-To-Start indicator, 1 = Chiller as a compressor ready to start next. 0 = Chiller as a compressor available to start (it may not be next compressor starting).
EXV Gain	78	Configurable	T	Gain selection based on chiller size and valve type. Alternate Mode – Gain based on chiller function (Cool/Ice/Heat).
EXV Offset	700	Configurable	T	Offset selection based on chiller size and valve type. Alternate Mode – Offset based on chiller function.
SH Dropout Temp	10°F	10-50	T	Selected temperature that the EXV transitions from Pull-down control, to running on condition.

NOTE: Table 13 relies on Setpoints 1 and 2 in Table 14 on page 40. The setpoints listed in Table 13 should only be changed by a Daikin Applied technician. Contact a Daikin Applied service representative for more information.

Cooling Tower Fan Setpoints

Figure 35: TOWER Fan and Valve Setpoint Screen

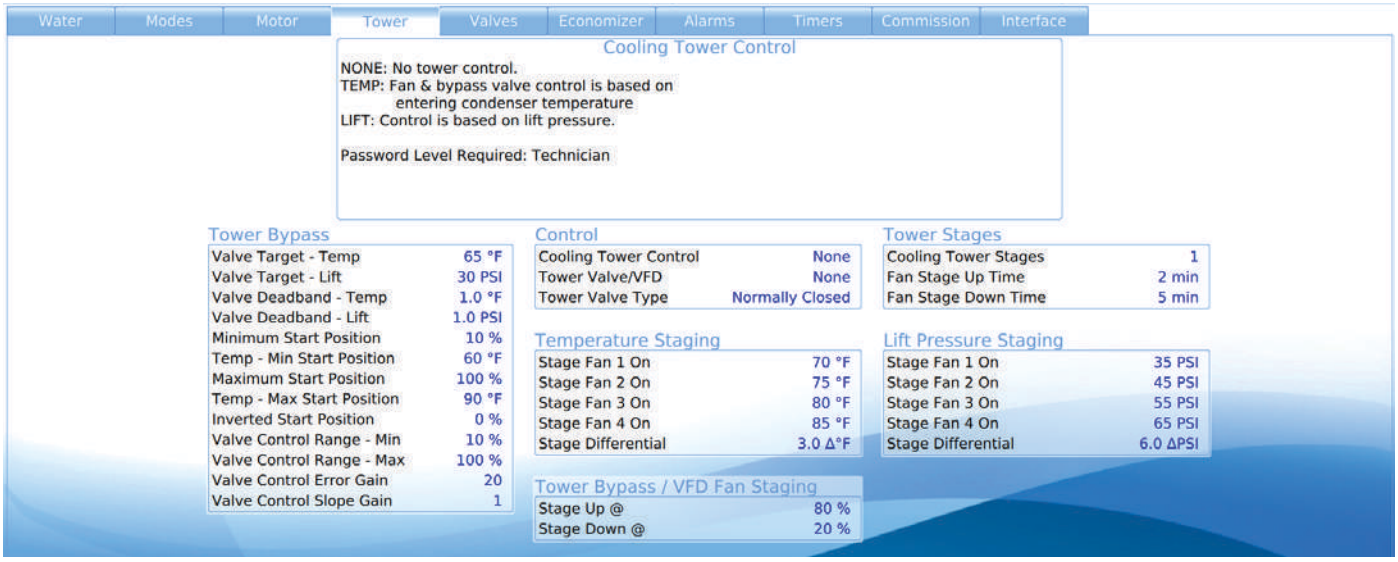

Table 14: TOWER Fan and Valve Setpoint Settings (See page 41 for complete explanation.) *Continued on next page

Description	Default	Range	Password	Comments
Valve Deadband (Lift) [SP5]	1.0 psi	0 to 20.0 psi	T	Control deadband, Tower SP1 =Lift
Valve Deadband (Temp) [SP4]	1.0 °F	0 to 10.0 °F	T	Control deadband, Tower SP1=Temp
Valve Target (Lift)	30 psi	10 to 130 psi	T	Target for lift pressure (Tower SP1= Lift), Works with SP5
Valve Target (Temp) [SP2]	65 °F	40 to 120 °F	T	Target for condenser EWT (Tower SP1= Temp), Works with SP4
Maximum Start Position [SP10]	100%	0 to 100%	T	Initial valve position when condenser EWT is at or above SP11
Temp - Min Position [SP9]	60 °F	0 to 100 °F	T	Condenser EWT at which initial valve position is set to SP8
Minimum Start Position [SP8]	10%	0 to 100%	T	Initial position of valve when condenser EWT is at or below SP9
Inverted Start Position	0%	0 to 100%	T	Selects the EXV position for an inverted chiller start.
Valve Control Slope Gain	1	0 to 99	T	Control gain for temperature (or lift) slope
Valve Control Error Gain	20	0 to 99	T	Control gain for temperature (or lift) error
Valve Control Range (Max)	100%	0 to 100%	T	Maximum valve position, overrides all other settings
Valve Control Range (Min)	10%	0 to 100%	T	Minimum valve position, overrides all other settings
Stage Down @	20%	0 to 100%	T	Valve position below which the fans can stage down (Tower - SP2 = Valve Stage Down VFD speed below which the next fan speed can turn off (Tower - SP2 = valve/VFD. (Valve position % closed)
Stage Up @	80%	0 to 100%	T	Valve position above which the fans can stage up (Tower - SP2 = Valve Stage Down VFD speed above which the next fan speed can turn on (Tower - SP2 = valve/VFD. (Valve position % open)
Stage #4 On (Lift)	65 psi	10 to 130 psi	M	Lift pressure for fan stage #4 on
Stage #3 On (Lift)	55 psi	10 to 130 psi	M	Lift pressure for fan stage #3 on
Stage #2 On (Lift)	45 psi	10 to 130 psi	M	Lift pressure for fan stage #2 on
Stage #1 On (Lift)	35 psi	10 to 130 psi	M	Lift pressure for fan stage #1 on
Stage #4 On (Temp)	85 °F	40 to 120 °F	M	Temperature for fan stage #4 on
Stage #3 On (Temp)	80 °F	40 to 120 °F	M	Temperature for fan stage #3 on
Stage #2 On (Temp)	75 °F	40 to 120 °F	M	Temperature for fan stage #2 on
Stage #1 On (Temp)	70 °F	40 to 120 °F	M	Temperature for fan stage #1 on
Stage Differential (Lift)	6.0 psi	1.0 to 20.0 psi	M	Fan staging deadband with SP1=Lift

Stage Differential (Temp)	3.0 °F	1.0 to 10.0 °F	M	Fan staging deadband with SP1=Temp
Fan Stage Down Time	5 min	1 to 60 min	M	Time delay between stage up/down event and next stage down
Fan Stage Up Time	2 min	1 to 60 min	M	Time delay between stage up/down event and next stage up
Cooling Tower Stages	2	1 to 4	M	Number of fan stages used
Twr Bypass Valve/Fan VFD [SP2]	None	None, Valve SP, Valve Stage, VFD Stage, Valve SP/ VFD Stage	M	None: No tower valve or VFD Valve SP: Valve controls to VALVE SP2(4) & 3(5) Valve Stage: Valve control setpoint changes to fan stage setpoint VFD Stage: 1st fan is VFD controlled, no valve Valve SP/VFD Stage: Both valve and VFD
Cooling Tower Control [SP1]	None	None, Temperature, Lift	M	None: No tower fan control Temperature: Fan and valve controlled by EWT Lift: Fan and valve controlled by lift pressure
Tower Valve Type	NC (To Tower)	NC, NO	T	Normally closed (NC) or normal open (NO) to tower

Explanation of Tower Control Settings

There are five possible tower control strategies: (I) **NONE**, (II) **VALVE SP**, (III) **VALVE STAGE**, (IV) **VFD STAGE**, and (V) **VALVE SP / VFD STAGE**. These control strategies are selected from the TOWER Setpoint Screen (see Figure 35 on page 40) using Setpoint 2. (In the following pages, "SP" means "Setpoint.") An explanation of each control strategy follows this paragraph. Along with each explanation is a diagram and graph to help illustrate the control strategy. Note that these graphs illustrate the default conditions for each strategy. See "Setting Tower Control Using the HMI Panel" on page 43 for details on how to set these tower control strategies.

(I) **NONE:** This control strategy is tower fan staging only. ***This is not a recommended strategy***. In this mode the tower fan staging (up to four stages) is controlled by either the condenser Entering Water Temperature (EWT) or LIFT pressure (difference between the condenser and suction pressure). Tower bypass or fan speed are not controlled. See Figure 36 and Figure 36.

Figure 36: TOWER Setpoint - SP2 - (I) NONE (I) NONE

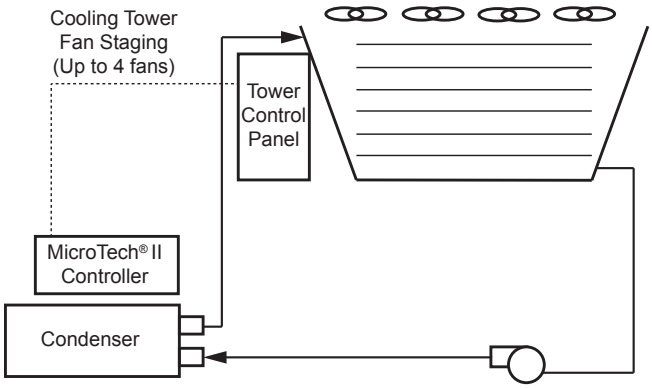

Figure 37: Temperature vs. Fan Stages

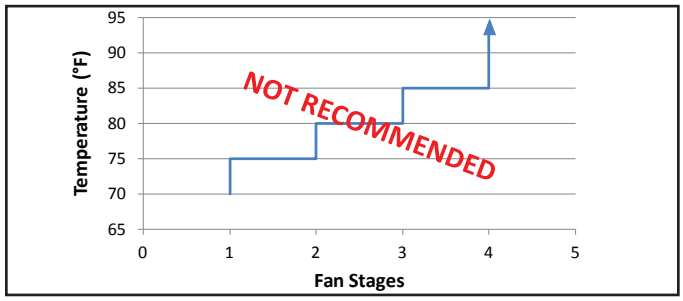

(II) **VALVE SP:** This control strategy is tower staging (up to four stages) with a low-limit controlled bypass valve. The tower fans are controlled as in (I), plus a tower bypass valve is controlled to provide a minimum condenser EWT. There is no interconnection between the fan control and the valve control. See Figure 38 and Figure 38.

Figure 38: TOWER Setpoint - SP2 - (II) VALVE SP (II)

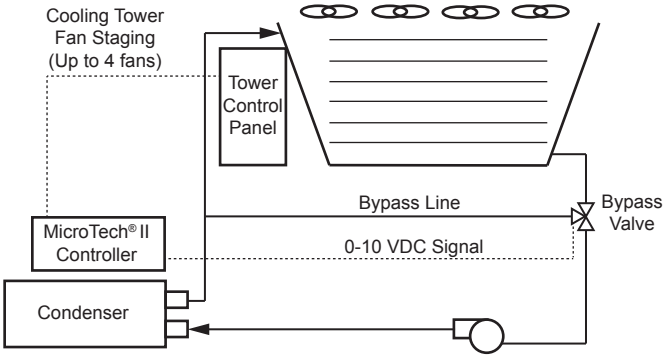

Figure 39: VALVE SP - Valve Opening vs. Temperature

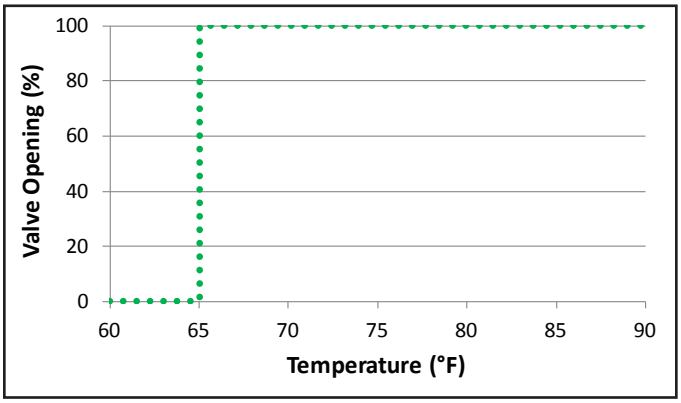

As shown in Figure 38, the default temperature at which the valve opens completely is 65°F. This temperature is the Valve SP (also called Valve Target) and is adjustable.

(III) **VALVE STAGE:** This control strategy is tower staging (up to four stages) with a stage-controlled bypass valve. In this mode, the bypass valve controls between fan stages

to smooth the control and reduce fan cycling. See Figure 38 and Figure 41.

Figure 40: TOWER Setpoint - SP2 - (III) VALVE STAGE

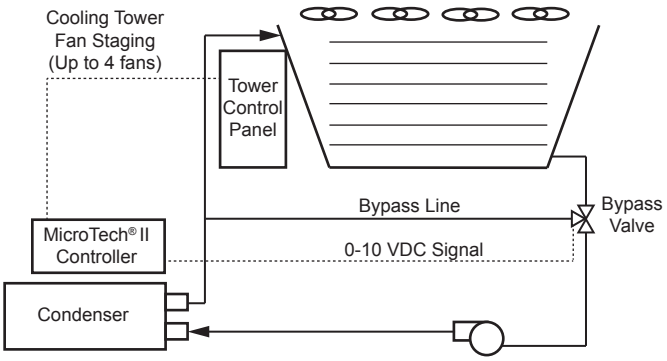

Figure 41: (III) VALVE STAGE - Valve Opening vs. Temperature

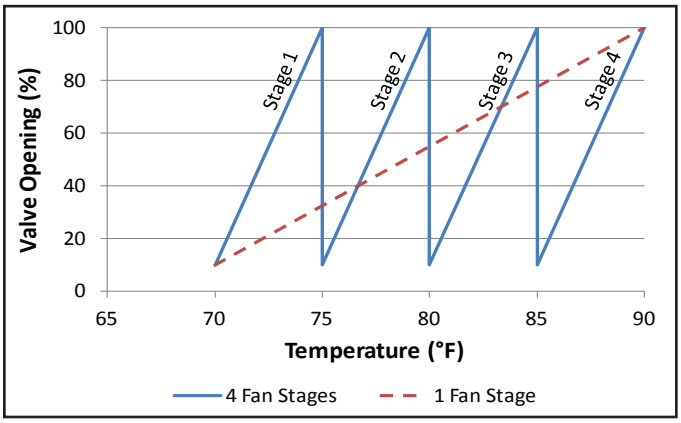

As shown in Figure 41, the default minimum and maximum valve opening positions are 10% and 100%, respectively. These minimum and maximum positions are adjustable anywhere between 0% and 100%. Additional fans stage on when the valve opening position reaches the maximum value that was set.

(IV) **VFD STAGE**: In this mode, a VFD controls the first fan. Up to three more fans are staged on and off and there is no bypass valve. See Figure 42 and Figure 43.

Figure 42: TOWER Setpoint - SP2 - (IV) VFD STAGE

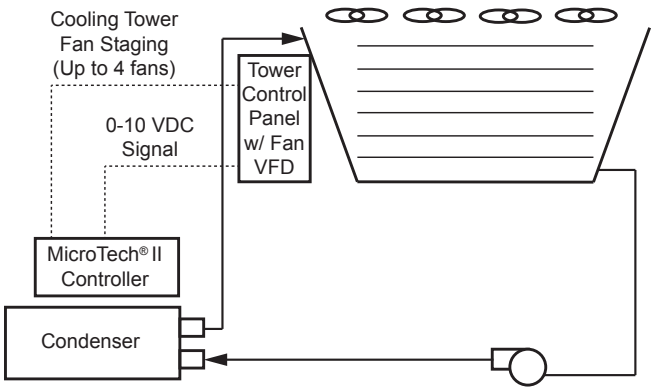

Figure 43: (IV) VFD STAGE - VFD Speed vs. Temperature

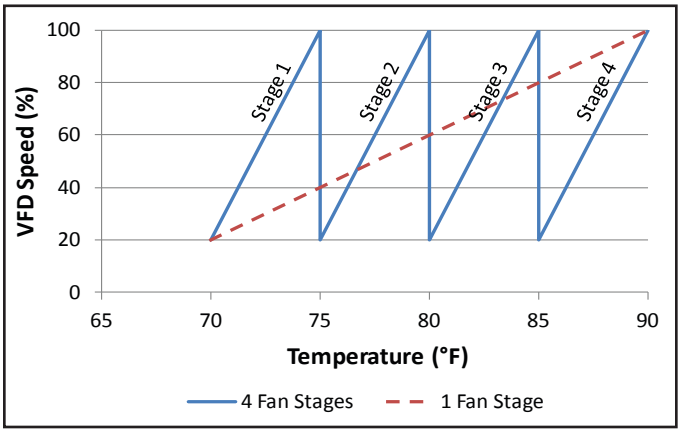

As shown in Figure 43, the default minimum and maximum VFD speeds are 20% and 100%, respectively. These minimum and maximum values are adjustable anywhere between 0% and 100%. Additional fans stage on when the VFD speed reaches the maximum value that was set.

(V) **VALVE SP / VFD STAGE**: This control strategy is tower fan control with a VFD and bypass valve control. See Figure 44 and Figure 45.

Figure 44: TOWER Setpoint - SP2 - (V) VALVE SP / VFD STAGE

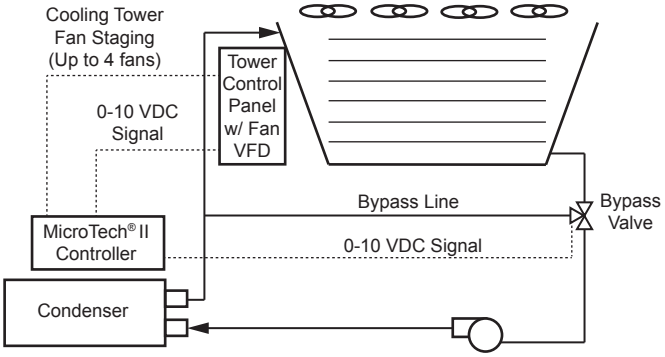

Figure 45: (V) VALVE SP / VFD STAGE - Percent vs. Temperature

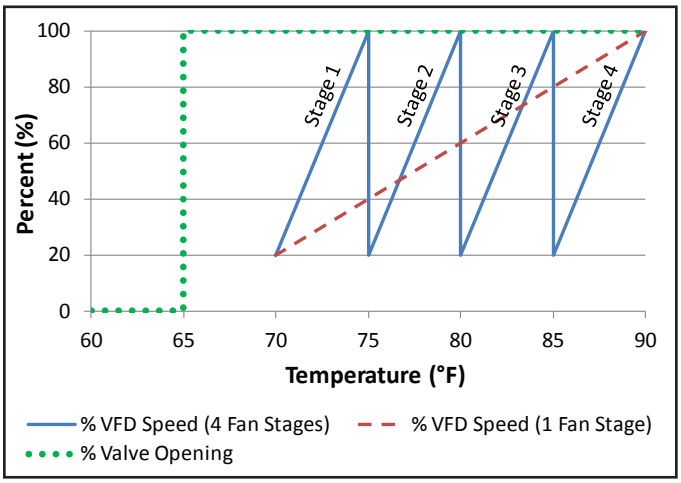

As shown in Figure 45, the default minimum and maximum VFD speeds are 20% and 100%, respectively. These minimum and maximum values are adjustable anywhere between 0% and 100%. Additional fans stage on when the VFD speed reaches the maximum value that was set. In addition, Figure 45 shows that the default temperature at which the valve opens completely is 65°F. This temperature is the Valve SP (also called Valve Target) and is adjustable. **BAS Alternate**

In control strategies (I) through (V), the chiller MicroTech® II is directly controlling the cooling tower fan staging, variable frequency drives, and bypass valves. As an alternative, a BAS can control these components based on a signal from the MicroTech® II controller. See Figure 46.

Figure 46: BAS Alternate

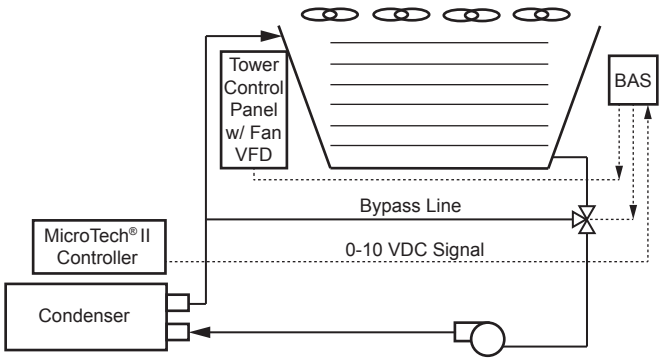

Setting Tower Control Using the HMI Panel

MicroTech® II may assist in the head control either directly or through inputs to a BAS to optimize performance and efficiency. Using the MicroTech® II, up to four Digital Outputs of Tower Staging along with three Analog Outputs (0-10 VDC) are available. The three Analog Outputs are as follows:

1. Bypass Valve signal
2. Tower Fan VFD signal
3. Tower Reset signal: Defined by a voltage to offset the tower control setting. If the MicroTech® II is controlling the tower, this signal is not used.

Setup for any tower control will be accomplished on the HMI using the TOWER Setpoint Screen (see Figure 35 on page 40) and the VALVE Setpoint Screen (see Figure 34 on page 39).

Setpoint 1 (Cooling Tower Control) on the TOWER Setpoint Screen sets the type of control. NONE is selected as default. Choose TEMP for entering condenser water control or LIFT to define the lift pressure between the Suction pressure and the Discharge pressure.

Setpoint 3 (Cooling Tower Stages) on the TOWER Setpoint Screen sets the number of tower stages that the tower has.

Setpoint 2 (Tower Bypass Valve / Fan VFD) on the TOWER Setpoint Screen defines if and how the first two MicroTech® II Analog Outputs (Bypass Valve signal and Tower Fan VFD signal) will be used with the Staging selected for the tower. A BAS or other control may monitor these outputs to understand when or how much the MicroTech® II would recommend for proper head control on the WMC unit. The third Analog Output (Tower Reset) is only configurable from the MicroTech® II controller. Commissioning setup of this 0-10 VDC signal, that will represent the MicroTech® II recommending increased head pressure by a reset voltage, is typically done by the Daikin Applied startup technician. Setup instructions for each of the five tower control strategies are provided next.

(I) NONE: Tower Fan Staging Only (This is the default setting but it is NOT a recommended control strategy.)

The following settings are used for the Tower Fan Staging Only mode, (SP = setpoint)

A. TOWER Setpoint Screen

1. SP1. Select TEMP if control is based on condenser EWT or LIFT if based on compressor lift expressed in pressure.
2. SP2. Select NONE for no bypass valve or fan VFD control.
3. SP3. Select one to four fan outputs depending on the number of fan stages to be used. More than one fan can be used per stage through the use of relays.
4. SP4. Select FAN STAGE UP TIME from 1 to 60 minutes. The default value of 2 minutes is probably a good starting point. The value may need to be adjusted later depending on actual system operation.
5. SP5. Select FAN STAGE DOWN TIME from 1 to 60 minutes. The default value of 5 minutes is probably a good starting point. The value may need to be adjusted later depending on actual system operation.
6. If TEMP is selected in SP1, use
   a. SP6. Select STAGE DIFFERENTIAL in degrees F. Start with default of 3°F.
   b. SP8-11. Set the STAGE ON temperatures consistent with the temperature range over which the condenser EWT is desired to operate. The default values of 70°F, 75°F, 80°F and 85°F are a good place to start in climates with moderate wet bulb temperatures. The number of STAGE ON setpoints used must be the same as SP3.
7. If LIFT is selected in SP1, use
   a. SP7. Select STAGE DIFFERENTIAL in PSI. Start with default of 6.0 PSI.
   b. SP12-15. Start with default setpoints. The number of STAGE ON setpoints used must be the same as SP3.

(II) VALVE SP: Tower Fan Staging With Bypass Valve Controlling Minimum EWT

A. TOWER Setpoint Screen

1. Use all of the same setpoint settings as those outlined in section I.A [the TOWER Setpoint Screen section for control strategy (I) NONE] except for SP2. For SP2, select VALVE SP for control of the bypass valve based on temperature or lift.

B. VALVE Setpoint Screen

1. SP1. Select NC or NO depending if valve is *normally closed* to the tower with no control power or *normally open* to the tower with no control power.
2. If TEMP was selected for SP1 on the TOWER Setpoint Screen, use the following on the VALVE Setpoint Screen:
   a. SP2. Set the VALVE TARGET. This setpoint is usually 5°F below the minimum fan stage setpoint established in SP8 of the TOWER Setpoint Screen. This keeps full flow through the tower until the last fan is staged off. The default for SP2 is 65°F.
   b. SP4. Set VALVE DEADBAND. The default of 1.0°F is a good place to start.
   c. SP12. Set the minimum position to which the valve can go. The default is 10%.
   d. SP13. Set the maximum position to which the valve can go. The default is 100%.
   e. SP14. Set the control gain for error. The default is 20.
   f. SP15. Set the control gain for slope. The default is 1.

⚠ CAUTION

Setpoints 14 and 15 on the VALVE Setpoint Screen are site specific, dealing with system fluid mass, component size, and other factors affecting the reaction of the system to control inputs. To avoid possible equipment damage, these setpoints should be set by personnel experienced with setting up this type of control.

3. If LIFT was selected for fan control, use:
   a. SP3. Set the VALVE TARGET. This setpoint is usually 5 psi below the minimum fan stage setpoint established in SP12 of the TOWER Setpoint Screen. This keeps full flow through the tower until the last fan is staged off. The default for SP3 is 30 psi.
   b. SP5. Set VALVE DEADBAND, the default of 1.0 psi is a recommended initial setting.
   c. SP12. Set the minimum position to which the valve can go. The default is 10%.
   d. SP13. Set the maximum position to which the valve can go. The default is 100%.
   e. SP14. Set the control gain for error. The default is 20.
   f. SP15. Set the control gain for slope. The default is 1.

⚠ CAUTION

Setpoints 14 and 15 on the VALVE Setpoint Screen are site specific, dealing with system fluid mass, component size, and other factors affecting the reaction of the system to control inputs. To avoid possible equipment damage, these setpoints should be set by personnel experienced with setting up this type of control.

(III) VALVE STAGE: Tower staging with bypass valve controlled by fan stage

A. TOWER Setpoint Screen

1. Use all of the same setpoint settings as those outlined in section I.A [the TOWER Setpoint Screen section for control strategy (I) NONE] except for SP2. For SP2, select VALVE STAGE. .

B. VALVE Setpoint Screen

1. Use all of the same setpoint settings as those outlined in section II.B [the VALVE Setpoint Screen section for control strategy (II) VALVE SP]. In addition, set the following:
   a. SP6. Set STAGE UP (valve position % open) above which the first fan can stage on. Fan STAGE#X ON temperature from SP8-11 on the TOWER Setpoint Screen and FAN STAGE UP TIME from SP4 on the TOWER Setpoint Screen must also be satisfied. The default for SP6 is 80%.
   b. SP7. Set STAGE DOWN (valve position % closed) below which the first fan can stage off. Fan STAGE#X ON temperature from SP8-11 on the TOWER Setpoint Screen and FAN STAGE DOWN TIME from SP5 on the TOWER Setpoint Screen must also be satisfied. The default for SP7 is 20%.

(IV) VFD STAGE: Fan VFD, no bypass valve

A. TOWER Setpoint Screen

1. Use all of the same setpoint settings as those outlined in section I.A [the TOWER Setpoint Screen section for control strategy (I) NONE] except for SP2. For SP2, select VFD STAGE for control of the VFD speed based on temperature or lift.

(V) VALVE SP/VFD STAGE: Fan VFD, no bypass valve

A. TOWER Setpoint Screen

1. Use all of the same setpoint settings as those outlined in section I.A [the TOWER Setpoint Screen section for control strategy (I) NONE] except for SP2. For SP2, select VALVE SP/VFD STAGE.

B. VALVE Setpoint Screen

1. Use all of the same setpoint settings as those outlined in section II.B [the VALVE Setpoint Screen section for control strategy (II) VALVE SP].

MOTOR Setpoint Screen

Figure 47: MOTOR Setpoint Screen

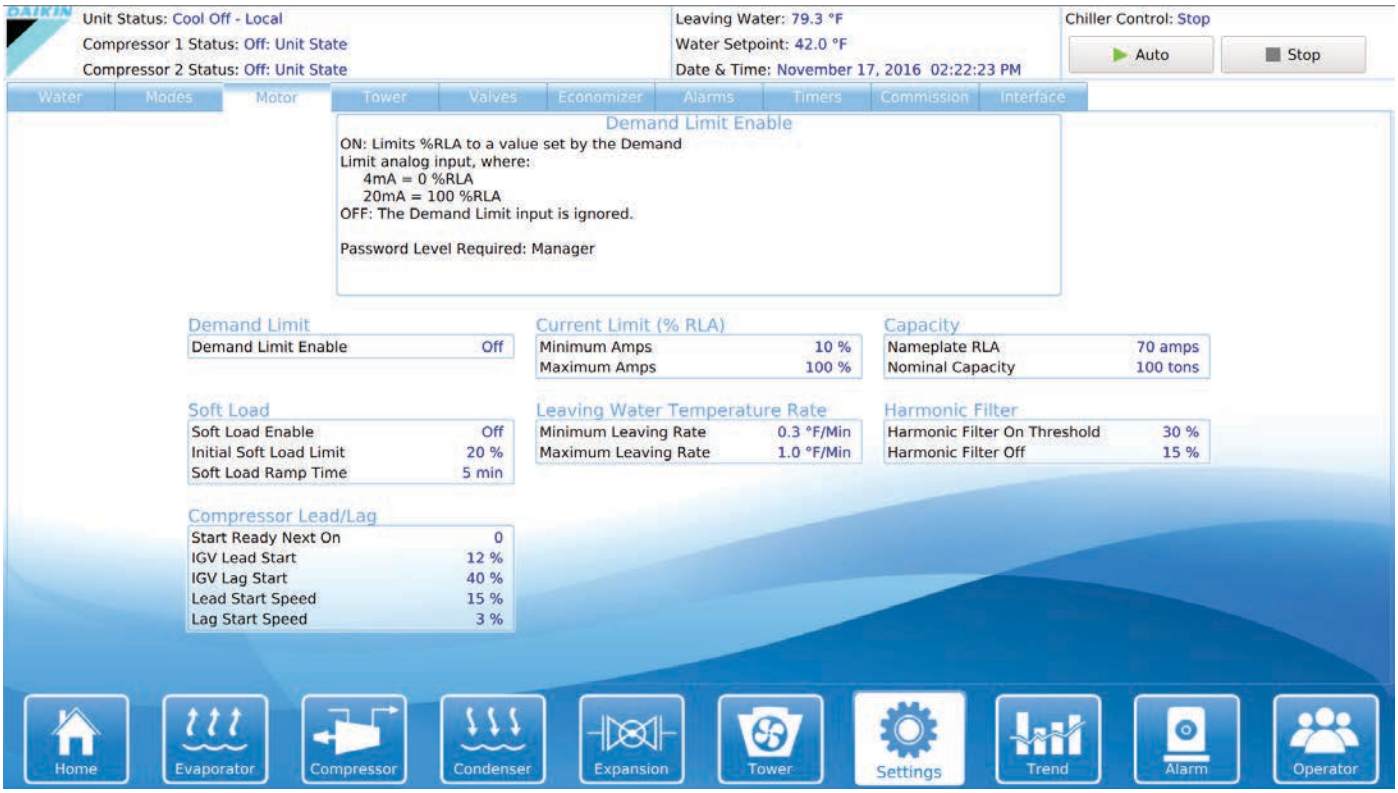

Table 15: MOTOR Setpoint Settings

Description	Default	Range	Password	Comments
Nominal Capacity	100	0 to 9999 Tons	T	Determines when to shut off a compressor. ONLY applies to multi-chiller setup.
Maximum LWT Rate	0.5 °F/min	0.1 to 5.0 °F/min	M	Inhibits loading if LWT change exceeds the setpoint value
Minimum LWT Rate	0.1 °F/min	0.1 to 5.0 °F/min	M	Additional compressor can start if LWT change is below setpoint
Soft Load Ramp Time [SP7]	5 min	1 to 60 min	M	Time period to go from initial load point (% RLA) set in SP5 to 100% RLA
Initial Soft Load Limit [SP6]	40%	10 to 100%	M	Initial amps as % of RLA, Uses SP4 & 6
Soft Load Enable [SP5]	OFF	OFF, ON	M	Soft load on or off, Uses SP6 & 7
Nameplate RLA * [SP4][	Dependent on dataplate		T	RLA value from chiller data plate
Maximum Amps	100%	10 to 100%	T	% RLA above which loading is inhibited (Load Limit) SP + 5% unloads compressor
Minimum Amps	40%	5 to 80%	T	% RLA below which unloading is inhibited
Demand Limit Enable	OFF	OFF, ON	O	ON sets %RLA at 0% for 4 mA external signal and at 100% RLA for 20 mA signal OFF – signal is ignored
Harmonic Filter On Threshold	30%	10-100%	M	Min %RLA that the harmonic filter shuts off
Harmonic Filter Off	15%	10-100%	M	Harmonic Filter Engages > 06 RLA%
IGV Lead Start	12%	0 to 100%	T	IGV Position for lead compressor start.
IGV Lag Start	40%	0 to 100%	T	IGV Position for lag compressor start
Lead Start Speed	25%	0 to 100%	T	Select percentage of available speed range.
Lag Start Speed	0%	0 to 100%	T	Select percentage of available speed range.

NOTE: Setpoints that have a technician level password (T) should only be changed by a Daikin Applied technician. Contact a Daikin Applied service representative for more information.

⚠ CAUTION

* Chiller Nameplate RLA **MUST** match chiller dataplate per compressor.

Compressor Capacity Control

Compressor capacity is determined by the status of the leaving chilled water temperature (LWT), which is a direct indicator of whether the chiller is producing enough cooling to satisfy the cooling load. The LWT is compared to the active chilled water setpoint, and compressor loading or unloading ensues, considering any capacity overrides that may be in effect.

Capacity Overrides

The conditions described in the following subparagraphs override normal capacity control when the chiller is in the COOL mode. Of the following limits, the one creating the lowest amp limit is in effect. The resulting present limit value for compressor current is stored in the Active Demand Limit variable.

Low Suction Pressure

If the suction pressure drops below the Low Suction pressure – Inhibit setpoint, the unit will inhibit capacity increases. If the suction pressure drops below the Low Suction pressure - Unload setpoint, the unit will begin capacity decreases.

High Discharge Temperature - Load

If the discharge temperature rises above the High Discharge Temperature - Load setpoint and the Suction SuperHeat is < 15.0 °F, the unit will begin capacity increases.

Maximum LWT Rate

The maximum rate at which the leaving water temperature can drop (chiller mode = COOL) is limited at all times by the Maximum Rate setpoint. If the rate exceeds this setpoint, capacity increases are inhibited.

Demand Limit

The maximum amp draw of the compressor can be limited by a 4 to 20 mA signal on the Demand Limit analog input. This function is only enabled if the Demand Limit setpoint is set to ON. The amp limit decreases linearly from the Maximum Amp Limit setpoint (at 4 mA) to the Minimum Amp Limit setpoint (at 20mA). If the amp draw rises above the limit value, the unit will inhibit capacity increases. If the amp draw rises to 3% or more above this value, the unit will begin capacity decreases.

Network Limit

The maximum amp draw of the compressor can be limited by a value sent through a BAS network connection and stored in the Network Limit variable. If the amp draw rises above the limit value, the unit will inhibit capacity increases. If the amp draw rises to 3% or more above this value, the unit will begin capacity decreases.

Minimum Amp Limit

The minimum amp draw of the compressor can be limited by the Minimum Amps setpoint. If the amp draw drops below the limit value, the unit will load capacity to maintain minimum amps.

Maximum Amp Limit

The maximum amp draw of the compressor is always limited by the Maximum Amps setpoint. This limit has priority over all other functions including manual capacity control. If the amp draw rises above the limit value, the unit will inhibit capacity increases. If the amp draw rises to > 3% or more above this value, the unit will begin capacity decreases.

MODES Setpoints

Figure 48: MODES Setpoint Screen

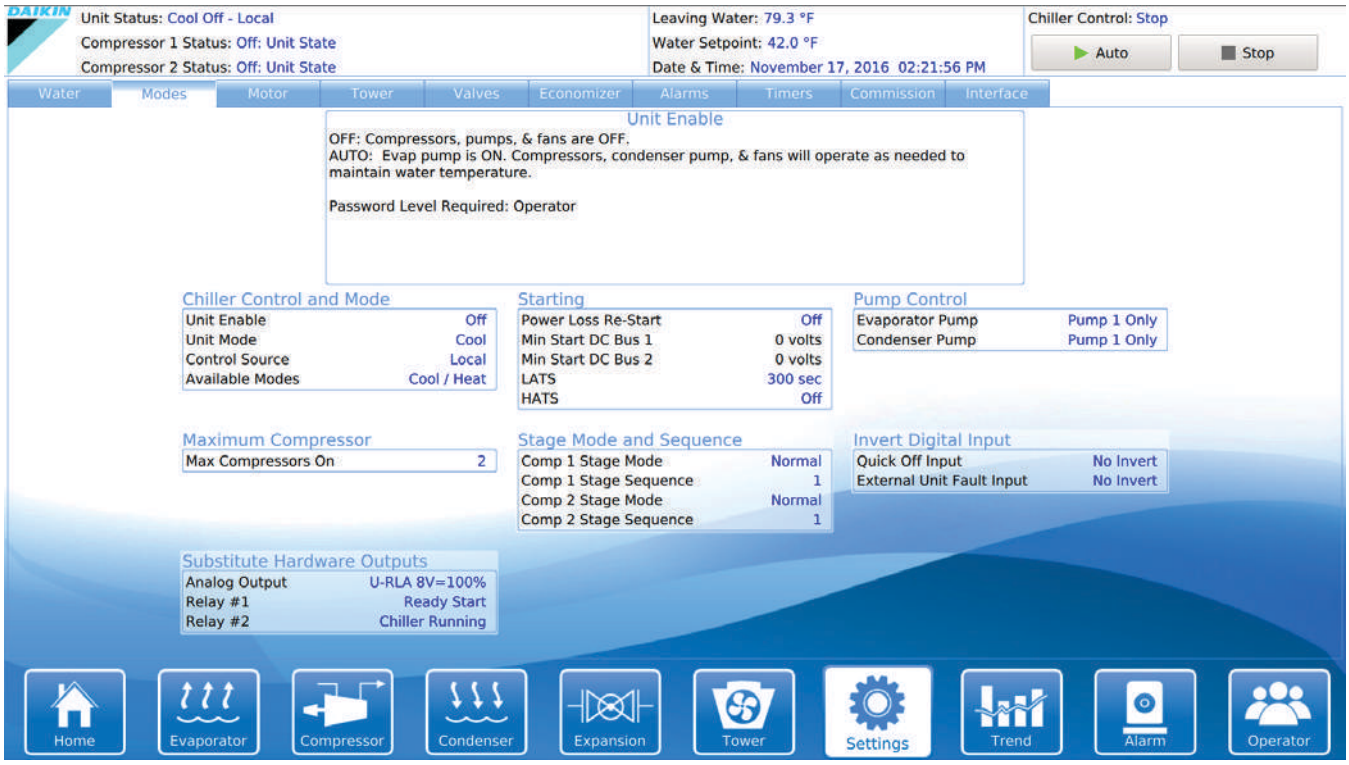

Table 16: MODES Setpoint Settings

Description	Default	Range	Password	Comments
Compr # 2 Stage Sequence #	1	1,2, … (# of Compressors)	M	Sets sequence number for # 2 compressor. If set to 1, it is always first to start. If set to 2, it is always second to start. (Note 1)
Compr # 2 Staging Mode	Normal	Normal, Efficiency, Pump, Standby	M	Normal uses standard sequencing, Efficiency starts one compressor on each unit, Pump starts all compressors on one chiller first, Standby uses this compressor only if another fails
Compr #1 Stage Sequence #	1	1,2, … (# of Compressors)	M	Sets sequence number for # 1 compressor. If set to 1, it is always first to start. If set to 2, it is always second to start. (Note 1)
Compr #1 Staging Mode	Normal	Normal, Efficiency, Pump, Standby	M	Normal uses standard sequencing, Efficiency starts one compressor on each unit, Pump starts all compressors on one chiller first, Standby uses this compressor only if another fails
Maximum Compressors ON	2	1-8	M	Total number of compressors allowed to run at one time
BAS Network Protocol	MODBUS	None, Local, BACnet, LonWorks, MODBUS, Remote	M	Sets BAS Standard Protocol to be used, or LOCAL if none
Condenser Pump	Pump #1 Only	Pump #1 Only, Pump #2 Only, Auto Lead, #1 Primary, #2 Primary	M	Pump #1 Only, Pump #2 Only, use only these pumps AUTO, balance hours between #1 and #2 #1 Primary, #2 Primary, if primary fails, use other
Evaporator Pump	Pump #1 Only	Pump #1 Only, Pump #2 Only, Auto Lead, #1 Primary, #2 Primary	M	Pump #1 Only, Pump #2 Only, use only these pumps AUTO, balance hours between #1 and #2 #1 Primary, #2 Primary, if primary fails, use other
Control Source	Switches	Switches, Local, BAS	O	Sets control source. See "Unit Enabling/Disabling" on page 29.
Unit Enable	OFF	OFF, AUTO	O	OFF: everything is off. AUTO: Evap pump on, comp, cond pump and tower on as required to meet LWT
Unit Mode	COOL	COOL, HEAT	O	COOL, HEAT [Templifier]: Maintains LWT at WATER-SP.
Power Loss Re-Start	OFF	ON, OFF	O	ON= clears timers, enables pumps, and clears power loss alarms
Invert Digital Input	No	No Invert	M	Quick Off (All Off)= 0-24 VAC. External Unit Fault Input= Configurable
Analog Output	Tower Reset	Bypass Valve, Tower Fan VFD, Tower Reset	M	Sets tower control using 0-10 VDC
Relay #1 and #2	Configurable		M	Relay #1: Evap Water Pump #2, Relay #2: Cond Water Pump #1

NOTE: If both compressors have the same sequence number, they will automatically balance starts and run-hours.

WATER Setpoints

Figure 49: WATER Setpoint Screen

Table 17: WATER Setpoint Settings

Description	Default	Range	Password	Comments
Maximum Reset Delta T	0.0°F	0.0 to 20.0 °F	M	Set the maximum reset that can occur, in degrees F if LWT reset is selected or max reset at 20 mA input if 4-20 mA is selected in SP7
Start Reset Delta T	10.0°F	0.0 to 20.0 °F	M	Sets the evap delta-T above which Return reset begins
LWT Reset Type [SP7]	NONE	NONE, RETURN, 4-20mA	M	Select reset type, NONE for none, RETURN for resetting chilled water based on the entering water, or 4-20 mA for external analog signal
Templifier Source Reset:	55°F	50 to 100°F	M	Sets maximum Delta T allowed between active LWT SP and evaporator LWT. Active LWT SP is lowered as necessary to prevent exceeding this value.
Templifier Source No Start:	70°F	30 to 100°F	M	Entering evaporator water temp below which Templifier will not start.
Stage Delta T	1.0	0.5 to 5°F	M	Sets the temperature the leaving water must be above setpoint for next compressor to start
Startup Delta T	3.0°F	0.0 to 10.0 °F	M	Degrees above setpoint for chiller to start
Shutdown Delta T	3.0°F	0.0 to 3.0 °F	M	Degrees below setpoint for chiller to stop
Leaving Water Temp - Cool	44.0°F	35.0 to 80.0 °F	M	Evaporator LWT setpoint in COOL mode
Leaving Water Temp - Heat	135.0°F	110 to 135°F	M	Condenser LWT setpoint in HEAT mode

Leaving Water Temperature (LWT) Reset

The Active Leaving Water variable shall be set to the current Leaving Water Temperature (LWT) setpoint unless modified by one of the reset methods below. (The current LWT setpoint is Cool LWT as determined by the chiller mode.) The type of reset in effect is determined by the LWT Reset Type setpoint (Setpoint 7 of the WATER Setpoint Screen). It is important to note that all reset functions are designed with a filter to prevent chiller shutdown in the case of a sudden delta change.

Reset Type – NONE

The Active Leaving Water variable is set equal to the current LWT setpoint, determined by the Unit mode.

Reset Type – RETURN *(Cool Mode)*

The Active Leaving Water variable is adjusted by the return water temperature.

When the chiller mode = COOL, the Active Leaving Water variable is reset using the following parameters:

1. Cool LWT setpoint
2. Max Reset Delta T setpoint
3. Start Reset Delta T setpoint

For example, a reset is accomplished by changing the Active Leaving Water variable from the (Cool LWT setpoint) to the (Cool LWT setpoint + Max Reset Delta T setpoint) when the evaporator (return – leaving) water temperature delta varies from the (Start Reset Delta T setpoint) to 0.

To prevent a possible surge at startup, the compressor will not start if the evaporator LWT is lower than Templifier No Start set point.

Reset Type – 4-20mA *(Cool Mode)*

The Active Leaving Water variable is set equal to the Cool LWT setpoint if the reset signal is less than or equal to 4 mA. It is set equal to (Cool LWT setpoint + Max Reset Delta T setpoint) if the reset signal equals or exceeds 20 mA. The Active Leaving Water variable will vary linearly between these extremes if the reset signal is between 4 mA and 20 mA. An example of this action is shown in the figure below.

Figure 50: LWT Reset

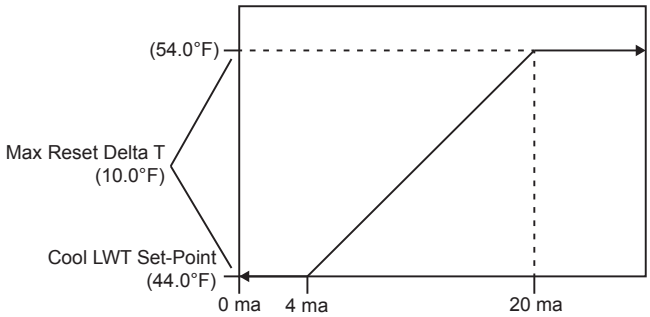

NOTE: Temperatures in above figures are examples only.

Reset Type – 4-20mA (Heat Mode)

The Active LWT Target variable is set equal to the Heat LWT set point if the reset signal is less than or equal to 4 mA. It is set equal to (Heat LWT [BAS] set point - Max Reset Delta T set point) if the reset signal equals or exceeds 20 mA. The Active LWT Target variable will vary linearly between these extremes if the reset signal is between 4 mA and 20 mA. An example of this action is shown below.

Figure 51: LWT Reset

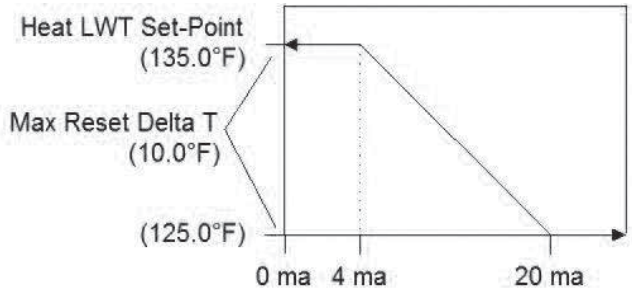

NOTE: Temperatures in above figures are examples only.

Reset Type – RETURN (Heat Mode)

The Active Leaving Water variable is adjusted by the return water temperature. When the chiller mode = HEAT, the active Leaving Water variable is reset using the following parameters:

1. Heat LWT setpoint
2. Max Reset Delta T setpoint
3. Start Reset Delta T setpoint

Reset is accomplished by changing the Active Leaving Water variable from the (Heat LWT Setpoint) to the (Heat LWT setpoint – Max Reset Delta T setpoint) when the condenser (leaving – return) water temperature delta varies from the (Start Reset Delta T setpoint) to 0. Note, it will in reality it only approaches 0.0 therefore you only approach Max Reset. The reset is filtered to not allow sudden changes in the Active setpoint, which may cause sudden stops in leaving water satisfied. Choosing this option can also in effect give you return water control. An example of this action is shown below.

Figure 52: LWT Return Reset

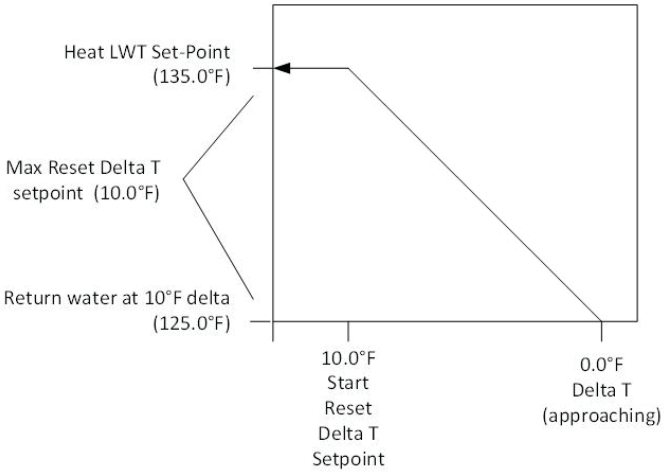

NOTE: Temperatures in above figures are examples only.

Figure 53: Service Screen

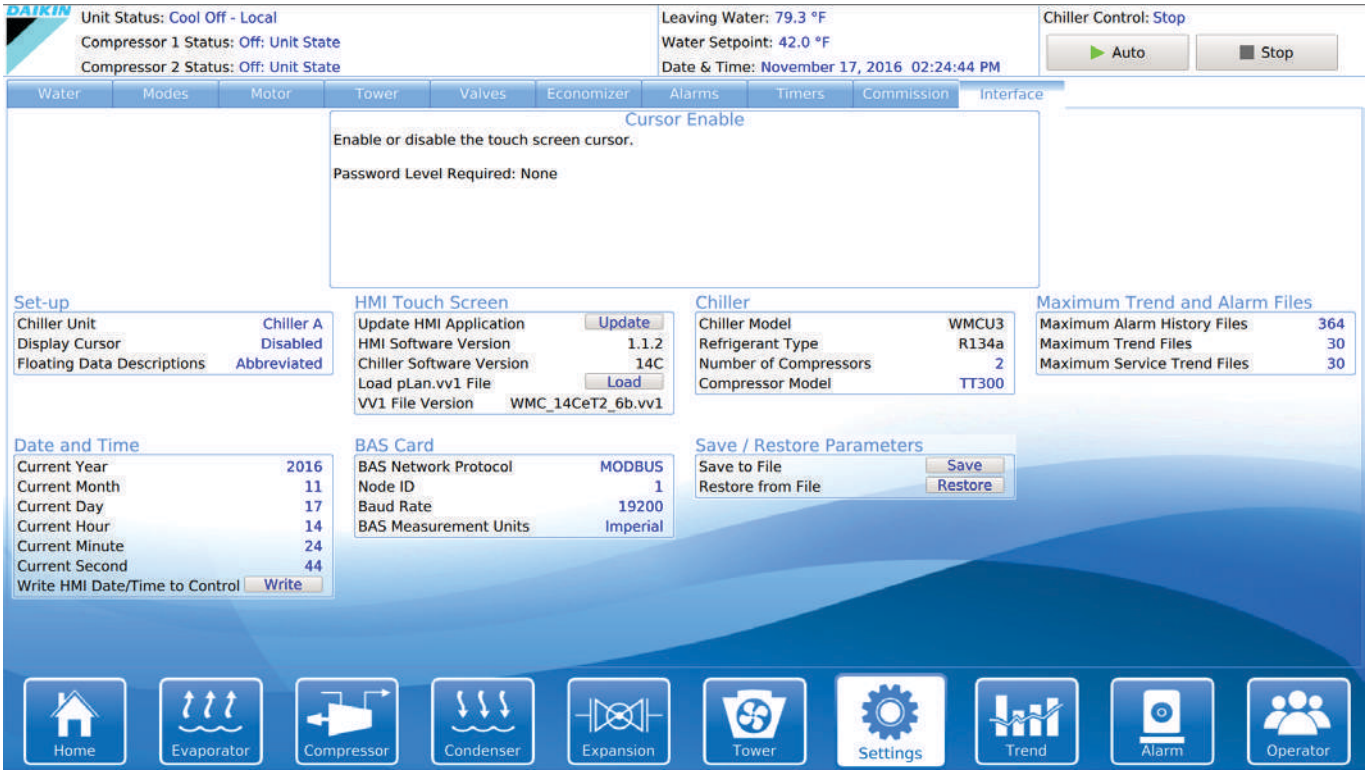

Interface Screen

The Service Screen is accessed by pressing the Interface button from any SET screen. While containing information and activity buttons for the service technician, it also has valuable information for the operator.

The upper left corner of the Service Screen contains compressor information such as operating hours and number of starts for each compressor. “Spare Capacity” is used to set the compressor stopping increments.

Pressing the Date/Time window on the left side of the Service Screen opens the Date and Time Properties Window, shown in Figure 53. Change the date and time on the “Date & Time” tab. To change the date, use the drop down menu to choose the correct month, use the up and down arrows to scroll to the correct year, and then select the correct day on the calendar shown. To change the time, highlight the time in the text field below the analog clock and use the up and down arrows to scroll to the correct time. Use the drop down menu in the “Time Zone” tab to change the time zone to the correct area.

NOTE: It is likely that the chiller will contain the factory settings for date, time, and time zone; therefore, it is important to verify or change these settings when the chiller is first used on the job-site. Failure to do so will result in incorrectly labeled History files.

The Display Units button on the Operator Screen allows selection of Inch-Pounds or Metric units of measure on the HMI.

The OPERATING MANUAL button displays the manual in Adobe.

SELECT LANGUAGE is accessed on the Operator Screen (Figure 54) and allows toggling between the available languages. The language can be set separately for display or history, which is used for alarm and trend files. In order to change the language displayed on the HMI, scroll to the correct language using the left and right arrow buttons and then press the DISPLAY button. In order to change the language stored in the history files, scroll to the correct language and then press the HISTORY button. Note that the DISPLAY and HISTORY buttons must be pressed in order to make the selected language active in these respective areas.

Also on the Operator screen, the PASSWORD SET button is used to access the Keyboard (see Figure 30 on page 34) to enter a password.

The version numbers shown under the pLAN Nodes matrix are the controllers’ software identification. The number in the upper right corner is the HMI software identification number. These numbers may be required by Daikin Applied to answer questions about unit operation or to assist in possible future upgrades of software.

HISTORY Screens

The HMI is capable of storing two types of history: trend history and alarm history. These two types are described in the following sections.

Trend History Screen

The Trend History Screen (Figure 55) is accessed by clicking the TREND button at the bottom of any screen that contains this button

Figure 54: Operator Screen.

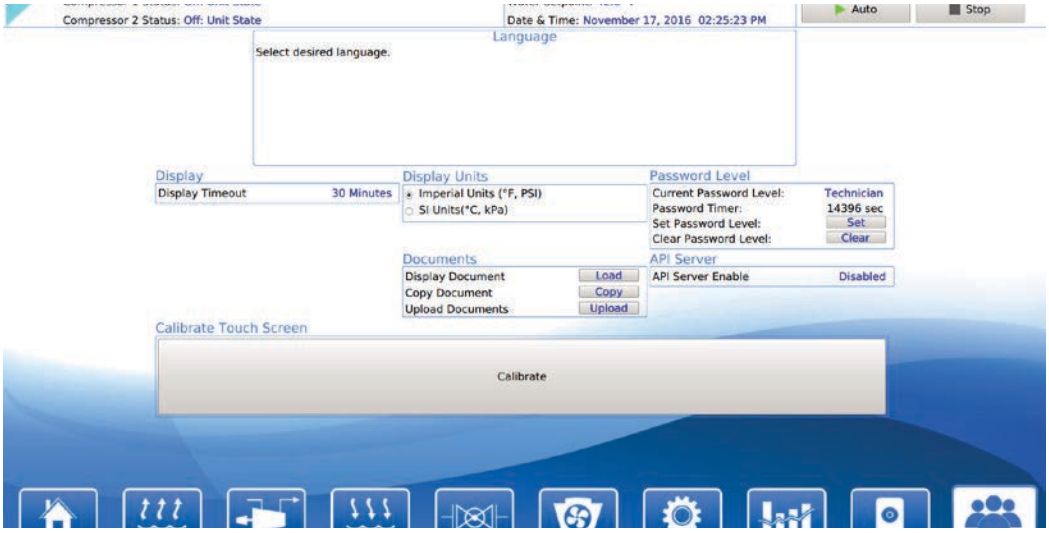

Figure 55: Trend History Screen

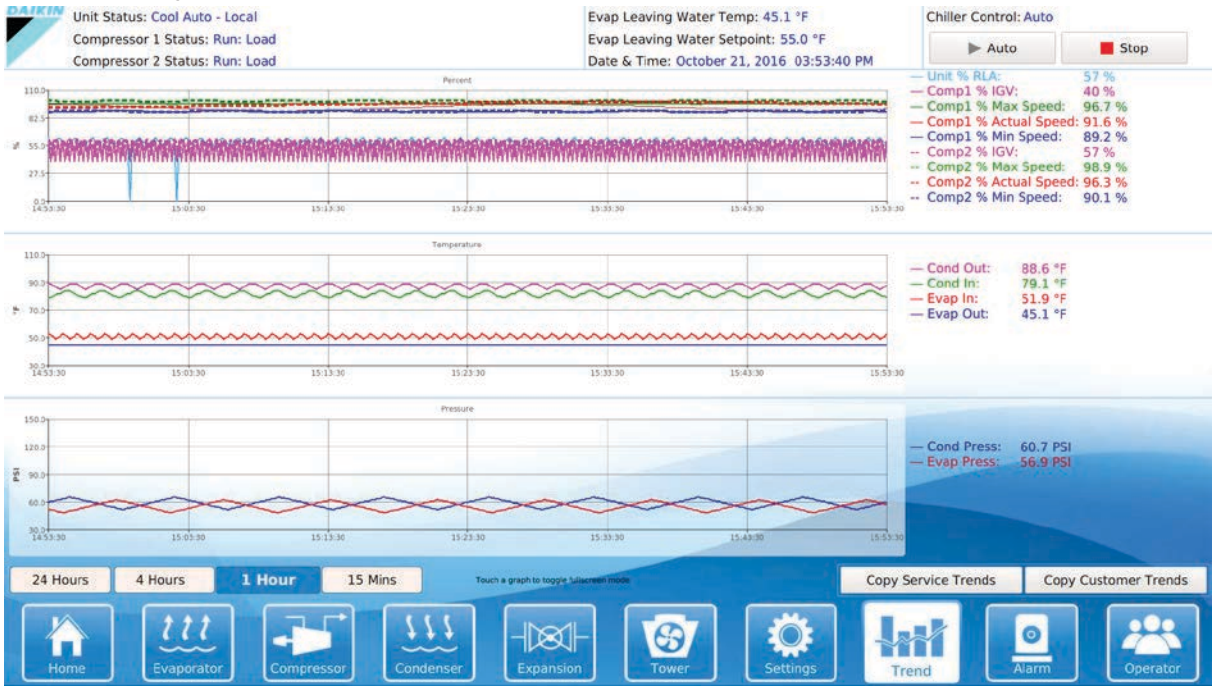

The Trend History Screen allows the user to view the various parameters listed on the right side of the screen. The temperature scale in °F is on the left. Pressure in psi and % RLA are represented by the right-hand scale. The COMP button toggles between compressor #1 and compressor #2.

Notice that three separate red lines are displayed on the Trend History Screen. Two of those red lines will be thinner than the other. The thin red line on the bottom of all the red lines represents the minimum motor speed. The thin red line on the top of all the red lines represents the maximum motor speed. The thick red line, which should be somewhere between the minimum and maximum motor speed lines, represents the actual motor speed.

The Trend History Screen can display history for 24-hour, 4-hour, 1-hour, or 15-minute periods by pressing 24, 4, 1, or 1/4, respectively. Pressing the NOW button for any time period will start the display for the current time beginning on the right of the screen with history flowing to the left. The arrow buttons scroll the time period forward or backward.

When the HMI PC is powered on after being off, the Trend History Screen will only display the history starting from the time the HMI PC was powered on. Previous trend history can be downloaded but there will be a gap in the data from when the HMI PC was off. Trend history is not affected if only the HMI screen (not the HMI PC) is off or in sleep mode. For details on how to download the trend history, reference the "Alarm History Screen" section starting on page 52.

Alarm History Screen

Figure 56: Alarm History Screen

The Alarm History Screen (Figure 56) is accessed from the Alarm button shown highlighted, then by pressing the HISTORY tab as shown. Use the date button to choose the desired date. Use the Copy button to extract the desired alarm log to a USB stick. An example of the date and copy buttons is shown in the adjacent figure. There are three types of alarms:

1. **Fault (Red text)**- This is an equipment protection alarm that shuts a unit or compressor off.
2. **Problem (Yellow text)**- This is a limit alarm that limits compressor loading in response to an out-of-normal condition. If the condition that caused a limit alarm is corrected, the alarm light will be cleared automatically.
3. **Warning (Dark Blue text)**- This is a notification only. The controller takes no action in response to this alarm.

Each alarm displays the date stamp, action taken, and the cause of the alarm. Clicking on a listed alarm will bring up more details about that particular alarm at the top of the screen.

Although the Alarm History Screen only displays the eight most current alarms, a record of ALL alarms is stored in the HMI PC. Note that this record may include alarms that occurred when the chiller was in the factory. This record is maintained even if the HMI PC is powered off. When the HMI is powered back on, the last eight alarms will show back up on the Alarm History Screen and all alarm history will still be available for download. (The download process is described next.) If an alarm both occurs and is cleared when the HMI PC is powered off, it will not be recorded in the alarm history.

Figure 57: Date and Copy Pop-Up Windows

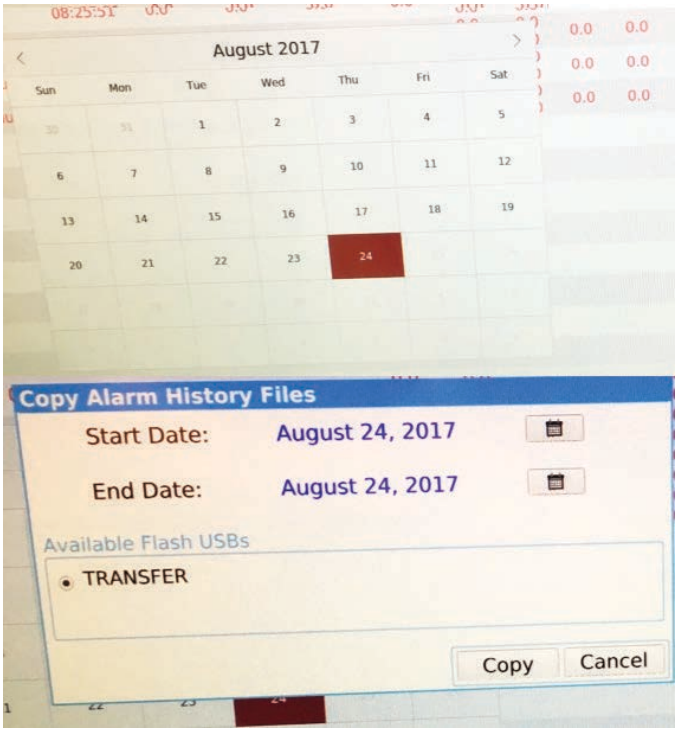

The Alarm History Screen can be used to download the trend history (Figure 55) or the alarm history (Figure 56) via USB. In order to download the trend or alarm history, first insert a USB drive into the left side of the monitor as seen in the following figure.

Figure 58: USB Port on HMI screen

NOTE: In order to prevent viruses from being transferred from the USB drive to the HMI, it is important that a clean USB drive is used. Do NOT use a USB drive that contains any auto-executable files.

If a directory screen opens when the USB drive is inserted, close out of that screen and continue with the directions instructed below.

To Download Trend History:

- Make sure that the "History File" text field on the right side of the Alarm History Screen shows a date. If it shows "ALARMS" rather than a date, press either the PREV or NEXT button. (Pressing the PREV button when the "History File" text field shows "ALARMS" will bring up yesterday's date. Pressing the NEXT button when the "History File" text field shows "ALARMS" will bring up today's date.)
- Use the PREV or NEXT button to change the date in the "History File" text field to the desired date. The dates will stop scrolling when the last file in that direction has been reached. (The HMI PC will store 30 days of history at a minimum. More days might be stored depending on the trend history file sizes. The HMI PC will automatically delete old trend history files as needed to make room for new trend history files.)
- Take note of the file size of that date's history by viewing the "Size" text field. Press the COPY to USB button and watch the file size in the "Size" text field count up to the noted file size. Once this text field has stopped counting and has reached its actual file size, the download of that file to the USB is complete.
- Repeat this process for each desired day of trend history. Each day must be downloaded individually. It is not possible to download multiple days of trend history at once.

To Download Alarm History:

- Make sure that the "History File" text field on the right side of the Alarm History Screen shows "ALARMS." If it shows a date instead, press the ALARMS button.
- Take note of the file size of the alarm history by viewing the "Size" text field. Press the COPY to USB button and watch the file size in the "Size" text field count up to the noted file size. Once this text field has stopped counting and has reached its actual file size, the download of the alarm history to the USB is complete. (Note that unlike the trend history files, alarm history only has one file.)

Viewing/Using Trend History and Alarm History Files:

- To download trends press the Trends button and then "Copy Service Trends". There will be a folder created called "Trend_Files". Trend history file names will be displayed as "TrendXXXXXX", where the first two X's will be numbers to indicate the year, the second two X's will be numbers to indicate the month, and the last two X's will be numbers to indicate the day. For example, if there is a file called Trend140510, it indicates that the file contains trend history from 5/10/2014.
- To download alarms, click "Copy". The alarm history file name will be displayed as "AlarmXXXXXXXX."
- All trend history and alarm history files are saved from the HMI PC as .csv files. These files can be opened on a normal PC and manipulated using Microsoft Excel for personal use. ***If tech support is requested, the original (un-manipulated) .csv files must be sent to Daikin Applied. Any other file formats are NOT accepted.***

Active Alarms Screen

The Active Alarms Screen (Figure 59) is only accessible when an active alarm exists on the unit. Pressing the red ALARM button on any screen will access the Active Alarms Screen. (In this manual, the red ALARM button is displayed as an example in Figure 24 on page 31.)

Figure 59: Active Alarms Screen

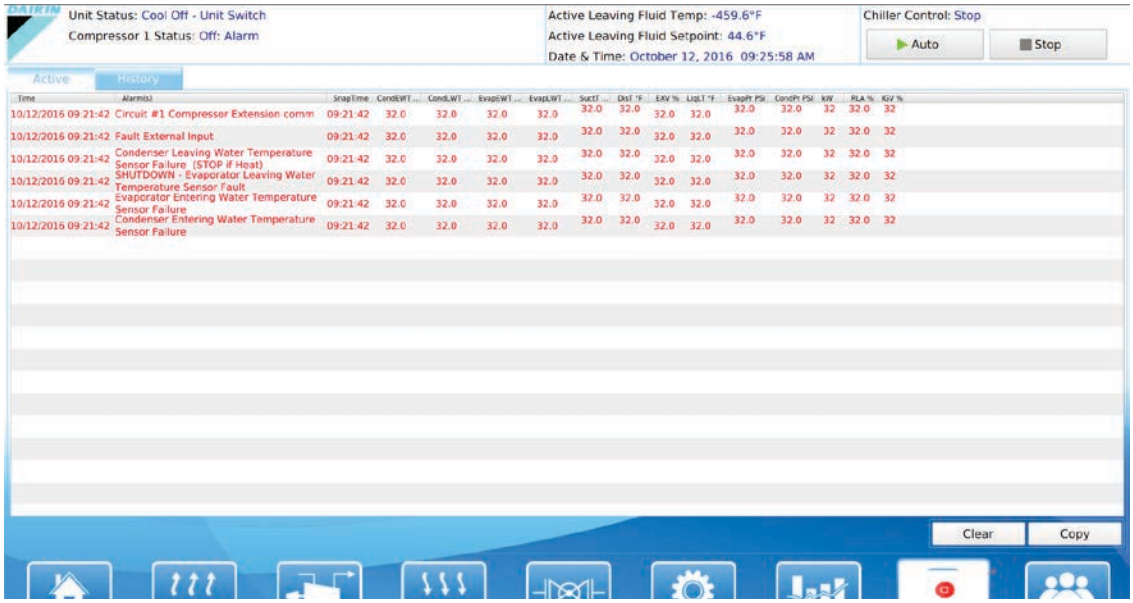

The current active alarms (there may be more than one) will be displayed on the Active Alarms Screen. Alarms are arranged in order of occurrence, with the most recent on top. The date/time and cause of the alarm are displayed. See the "Possible Alarms and Events" section starting on page 55 for specifics on alarms that may occur.

After eliminating the cause of the alarm, clear the alarm by pressing the CLEAR button. This will clear the alarm from the register and allow the unit to restart after going through the start sequence. The alarm notice will be deleted from the screen.

If the cause of the alarm is not remedied, the alarm is still active and the alarm message will remain open. The unit will not begin its starting sequence.

Possible Alarms and Events

There are three types of alarms: faults, problems, and warnings. In addition to these three alarms, there are also "events." See the following tables for examples of faults, problems, warnings, and events that can occur. Separate tables are shown based on whether the alarm source is the unit or the compressor.

NOTE: In the "Alarm Reset" column of the following tables, itallics indicate special alarm conditions or severity. If the "Alarm Reset" says "Auto-clears," it indicates that the alarm will auto-clear after the condition is resolved and the normal condition returns.

Fault Alarms

Equipment protection faults cause rapid compressor shutdown. The compressor is stopped immediately (if the compressor was running).

Table 18: Unit Fault Alarms

Description	HMI Alarm Message	Alarm Reset
Low Motor Current Comp 1	COMPR STOP - Motor Current Low	Auto-clears
Low Motor Current Comp 2	COMPR STOP - Motor Current Low	Auto-clears
No Condenser Water Flow	COMPR STOP - Condenser Water Flow Loss	Auto-clears
No Compressor Stop Comp 1	COMPR STOP - Current High with Compr OFF	Auto-clears
No Compressor Stop Comp 2	COMPR STOP - Current High with Compr OFF	Auto-clears
No Evaporator Water Flow	COMPR STOP - Evaporator Water Flow Loss	Auto-clears
Low Suction pressure Comp 1	COMPR STOP - Suction pressure Low	Auto-clears
Low Suction pressure Comp 2	COMPR STOP - Suction pressure Low	Auto-clears
Leaving Evaporator Water Temperature Sensor Fault Comp 1	COMPR STOP - Evap LWT Sensor Out of Range	Auto-clears
Surge High Suct SH-Running Comp 1	COMPR STOP - Surge Temperature	Auto-clears
Surge High Suct SH-Running Comp 2	COMPR STOP - Surge Temperature	Auto-clears
Expansion Alarm – FAULT (external alarm)	COMPR STOP - Control Fault (External Input)	Auto-clears
Check Valve Fault 1	CHILLER STOP - Check Valve Failure	*Locked off (requires local reset)*
Check Valve Fault 2	CHILLER STOP - Check Valve Failure	*Locked off (requires local reset)*

Table 19: Compressor Fault Alarms

Description	HMI Alarm Message	Alarm Reset
Compressor Current Overload Trip #1	COMPR STOP - Motor Current Overload	Auto-clears
Compressor Current Overload Trip #2	COMPR STOP - Motor Current Overload	Auto-clears *Locked off if UL Limit is exceeded*
High Motor Temperature Comp 1	COMPR STOP - High Motor Temperature	Auto-clears
High Motor Temperature Comp 2	COMPR STOP - High Motor Temperature	Auto-clears *Locked off if Tripped 3x in 50 min*
Overvoltage On Compressor 1	COMPR STOP - Line Voltage High	Auto-clears
Overvoltage On Compressor 2	COMPR STOP - Line Voltage High	Auto-clears
Undervoltage On Compressor 1	COMPR STOP - Line Voltage Low	Auto-clears
Undervoltage On Compressor 2	COMPR STOP - Line Voltage Low	Auto-clears
High Discharge pressure Comp 1	COMPR STOP - Discharge pressure High	Auto-clears *Locked off if Tripped 3x in 50 min*
High Discharge pressure Comp 2	COMPR STOP - Discharge pressure High	Auto-clears *Locked off if Tripped 3x in 50 min*
High Discharge Temperature Comp 1	COMPR STOP - Discharge Temperature High	Auto-clears *Locked off if Tripped 3x in 50 min*
High Discharge Temperature Comp 2	COMPR STOP - Discharge Temperature High	Auto-clears *Locked off if Tripped 3x in 50 min*
Starter Fault Compressor 1	COMPR STOP - Compressor Fault (previously used for WMC general compressor fault)	Reset is dependent on specific alarm
Starter Fault Compressor 2	COMPR STOP - Compressor Fault (previously used for WMC general compressor fault)	Reset is dependent on specific alarm

No Starter Transition Comp 1	COMPR STOP - Compressor Comm Loss (previously used for compressor communication error)	Auto-clears
No Starter Transition Comp 2	COMPR STOP - Compressor Comm Loss (previously used for compressor communication error)	Auto-clears
General Compressor Fault 1	COMPR STOP - Compressor Fault	Reset is dependent on specific alarm
General Compressor Fault 2	COMPR STOP - Compressor Fault	Reset is dependent on specific alarm
Communication Fault 1	COMPR STOP - Compressor Comm Loss	Auto-clears
Communication Fault 2	COMPR STOP - Compressor Comm Loss	Auto-clears
Interlock Fault	NO START - Interlock Fault	Auto-clears
Interlock Fault 2	NO START - Interlock Fault	Auto-clears

Problem Alarms

Problems do not cause compressor shutdown but do limit operation of the chiller.

Table 20: Unit Problem Alarms

Description	HMI Alarm Message	Alarm Reset
Condenser Water Freeze Protect Comp 1	COND PUMP ON - Discharge pressure Low (Freeze)	Auto-clears
Condenser Water Freeze Protect Comp 2	COND PUMP ON - Discharge pressure Low (Freeze)	Auto-clears
Low Suction pressure - Inhibit Loading Comp 1	NO LOAD - Suction pressure Low	Auto-clears
Low Suction pressure - Inhibit Loading Comp 2	NO LOAD - Suction pressure Low	Auto-clears
Low Suction pressure - Unload Comp 1	UNLOAD - Suction pressure Low	Auto-clears
Low Suction pressure - Unload Comp 2	UNLOAD - Suction pressure Low	Auto-clears
Ground Fault Protection 1	COMPR STOP - Ground Fault	*Locked off (requires local reset)*
Ground Fault Protection 2	COMPR STOP - Ground Fault	*Locked off (requires local reset)*

Warning Alarms

Warnings only generate a warning message to the operator. Chiller operation is not affected.

Table 21: Unit Warning Alarms

Description	HMI Alarm Message	Alarm Reset
Entering Condenser Water Temperature Sensor Fault	NO ACTION - Condenser EWT Out of Range	Auto-clears
Entering Evaporator Water Temperature Sensor Fault	NO ACTION - Evaporator EWT Out of Range	Auto-clears
Liquid Line Refrigerant Temperature Sensor Fault	NO ACTION - Liquid Line Temp Out of Range	Auto-clears
Leaving Condenser Water Temperature Sensor Fault	NO ACTION - Condenser LWT Out of Range	Auto-clears
Condenser Pump #1 Fault	No Alert shown on HMI panel	No Alarm
Condenser Pump #2 Fault	No Alert shown on HMI panel	No Alarm
High Discharge Temperature Comp 1	No Alert shown on HMI panel	No Alarm
High Discharge Temperature Comp 2	No Alert shown on HMI panel	No Alarm
Entering Evap Temperature Sensor Fault (EWT reset active)	No Alert shown on HMI panel	No Alarm
Chiller Running with Limited Capacity	No Alert shown on HMI panel	No Alarm
Load Balance Valve Fault 1	COMPR WARNING - Flooded Compressor	Operator Cleared Only
Load Balance Valve Fault 2	COMPR WARNING - Flooded Compressor	Operator Cleared Only

Table 22: Compressor Warning Alarms

Description	HMI Alarm Message	Alarm Reset
Repower After Power Loss 1	COMPR STOP - Line Voltage Low	Auto-clears
Repower After Power Loss 2	COMPR STOP - Line Voltage Low	Auto-clears

Events

Events do not generate a warning message to the operator but they may notify the BAS, if used. Chiller operation may be affected by events.

Table 23: Unit Events

Description	HMI Alarm Message	Alarm Reset
High Motor Current On Compressor #1	No Alert shown on HMI panel	No Alarm
High Motor Current On Compressor #2	No Alert shown on HMI panel	No Alarm
Evaporator Freeze Protect Comp 1	EVAP PUMP ON - Suction pressure Low (Freeze)	Auto-clears
Evaporator Freeze Protect Comp 2	EVAP PUMP ON - Suction pressure Low (Freeze)	Auto-clears
Evaporator Pump #1 Fault	No Alert shown on HMI panel	No Alarm
Evaporator Pump #2 Fault	No Alert shown on HMI panel	No Alarm
Re-Start Fault	No Alert shown on HMI panel	No Alarm
Re-Start Fault Comp 1	No Alert shown on HMI panel	No Alarm
Re-Start Fault Comp 2	No Alert shown on HMI panel	No Alarm

Table 24: Compressor Events

Description	HMI Alarm Message	Alarm Reset
Bearing Fault 1	COMPR STOP - Compressor Fault	Auto-clears *Pauses 20 min after 3rd alarm in 50 min*
Bearing Fault 2	COMPR STOP - Compressor Fault	Auto-clears *Pauses 20 min after 3rd alarm in 50 min*
Motor Fault 1	COMPR STOP - Compressor Fault	Auto-clears *Pauses 20 min after 3rd alarm in 50 min*
Motor Fault 2	COMPR STOP - Compressor Fault	Auto-clears *Pauses 20 min after 3rd alarm in 50 min*
Drive Fault 1	COMPR STOP - Compressor Fault	Auto-clears
Drive Fault 2	COMPR STOP - Compressor Fault	Auto-clears
Internal Control Fault 1	COMPR STOP - Compressor Fault	Auto-clears
Internal Control Fault 2	COMPR STOP - Compressor Fault	Auto-clears

The Controller

The controller is located in the control panel (see Figure 3 on page 5) adjacent to the HMI (see Figure 1 on page 4). Unit, compressor, evaporator, and condenser information is viewable on it, and all setpoints can be accessed from it. It is encouraged to use the controller to change setpoints only when the HMI is unavailable. The controller LCD screens read only in IP units of measure (inch-pounds and degrees Fahrenheit). SI units of measure can be selected with the appropriate controller setpoint screen but will appear only on the HMI.

Keypad

A 4-line by 20-character/line liquid crystal display and 6-button keypad is mounted on the controller, as shown in Figure 60.

Figure 60: Controller Keypad

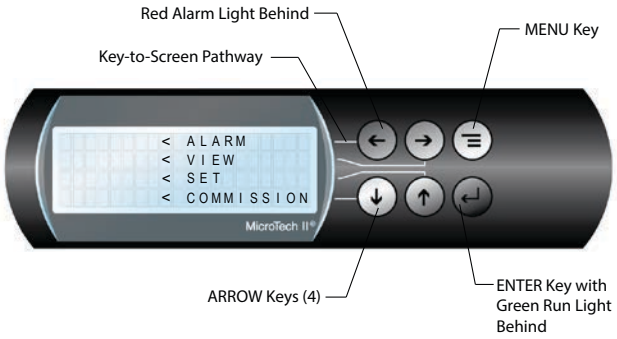

The four arrow keys (UP, DOWN, LEFT, RIGHT) have three modes of use:

1. Select a specific data screen in the menu matrix using dynamic labels such as ALARM, VIEW, SET, etc. This mode is entered by pressing the MENU key. *For ease of use, a pathway connects the appropriate button to its respective label on the screen.* .

Controller Inputs and Outputs

The following tables list the controller inputs and outputs, both analog and digital.

Table 25: Controller, Analog Inputs

#	Description	Signal Source	Sensor Range
1	Reset of Leaving Water Temperature	4-20 mA Current	0 to 20°F
2	Entering Evaporator Water Temperature	NTC Thermistor (10k@25°C)	-58 to 212°F
3	Entering Condenser Water Temperature	NTC Thermistor (10k@25°C)	-58 to 212°F
4	Leaving Condenser Water Temperature	NTC Thermistor (10k@25°C)	-58 to 212°F
5	Liquid Line Refrigerant Temperature	NTC Thermistor (10k@25°C)	-58 to 212°F
6	Demand Limit	4-20 mA Current	0-100 %RLA
7	Evaporator Water Flow	4 to 20 mA Current	0 to 10,000 gpm
8	Condenser Water Flow	4 to 20 mA Current	0 to 10,000 gpm
9	Optional Tower Sump Temperature	NTC Thermistor (10k@25°C)	-58 to 212°F
10	Leaving Evaporator Water Temperature	NTC Thermistor (10k@25°C)	-58 to 212°F

NOTE: "Sensor Range" in Table 25 indicates the range of the input, NOT the operating range of the chiller.

Table 26: Controller, Digital Inputs

#	Description	Signal	Signal
1	Unit OFF Switch	0 VAC (Stop)	24 VAC (Auto)
2	Remote Off/Enable	0 VAC (Stop)	24 VAC (Enable)
3	Mode Switch	0 VAC (Normal)	24 VAC (Alternate)
4	Manual Off	0 VAC (Off)	24 VAC (Enable)
5	Manual Off2	0 VAC (Off)	24 VAC (Enable)
6	Manual Off3	0 VAC (Off)	24 VAC (Enable)
7	Manual Off4	0 VAC (Off)	24 VAC (Enable)
8	Quick Off (All Off)	0 VAC (Quick Stop)	24 VAC (Enable)
9	Ground Fault	0 VAC (Alarm)	24 VAC (Off)
10	Ground Fault2	0 VAC (Alarm)	24 VAC (Off)
12	HATS Switch	0 VAC (Off)	24 VAC (Enable)
13	External Fault	Configurable	Configurable
17	Evaporator Water Flow Switch	0 VAC (No Flow)	24 VAC (Flow)
18	Condenser Water Flow Switch	0 VAC (No Flow)	24 VAC (Flow)

Table 27: Controller, Analog Outputs

#	Description	Output Signal	Sensor Range
1	Cooling Tower Bypass Valve Position	0 to 10 VDC	0 to 100% Open
2	Cooling Tower VFD Speed	0 to 10 VDC	0 to 100%
3	EXV signal to IB Valve Control Bd.	0 to 10 VDC	0 to 100%
4	Tower Control Reset	0 to 10 VDC	0 to 100% Mask Reset
5	% Unit Load	0 to 10 VDC	0 to 125% (8V = 100%)

NOTE: "Sensor Range" in Table 27 indicates the range of the output, NOT the operating range of the chiller.

Table 28: Controller, Digital Outputs

#	Description	Load	Output OFF	Output ON
1	Evaporator Water Pump #1	Pump Contactor	Pump OFF	Pump ON
2	Evaporator Water Pump #2	Pump Contactor	Pump OFF	Pump ON
3	Condenser Water Pump #1	Pump Contactor	Pump OFF	Pump ON
4	Condenser Water Pump #2	Pump Contactor	Pump OFF	Pump ON
5	Tower Fan #1	Fan Contactor	Fan OFF	Fan ON
6	Tower Fan #2	Fan Contactor	Fan OFF	Fan ON
7	Expansion Valve Calibration	Digital Input (50K Ohms)	Normal	Calibration
8	Alarm	Alarm Indicator	Alarm OFF	Alarm ON
9	Tower Fan #3	Fan Contactor	Fan OFF	Fan ON
10	Tower Fan #4	Fan Contactor	Fan OFF	Fan ON
11	Alarm Output	User Defined	Alarm OFF	Alarm ON

Controller Setpoints

Table 29 groups setpoints that relate to the entire unit operation and are stored in the controller. For a complete list of setpoints, refer to page 36 through page 48 .Standard settings are made through the HMI. The Password (PW) column indicates the password that must be active in order to change the setpoint. The letters in the Password column refer to the following:

O = Operator (the password number for operator level is 100)

M = Manager (the password number for manager level is 2001)

T = Technician (the password number for technician level is only provided to Daikin Applied technicians)

Table 29: Controller Setpoints

Description	Default	Range	PW
Unit			
Unit Enable	OFF	OFF, ON	O
Control Source	SWITCHES	Switches, Local (Touch Screen), BAS Network	O
Display Units	°F/psi	°F/psi, °C/kPa	O
Language	ENGLISH	ENGLISH, (TBD)	O
BAS Protocol	Modbus	NONE, BACnet, LonWorks, Modbus	M
Motor Amps			
Demand Limit	OFF	OFF, ON	M
Minimum Amps	3%	1 to 80%	M
Maximum Amps	100%	10 to 100%	M
Soft Load	OFF	OFF, ON	M
Begin Amp Limit	20%	10 to 100%	M
Soft Load Ramp	5 min	1 to 60 min	M
Maximum Rate	1.0 °F/min	0.1 to 5.0 °F/min	M
Minimum Rate	0.4 °F/min	0.1 to 5.0 °F/min	M
Staging			
Mode	Pump	Normal, Efficiency, Pump, Standby	M
Sequence #	1	1,2, … (# of Compressors)	M
Maximum Compressors ON	2	1-16	M
Stage Delta T	1.0 °F	0 to 9.9 °F	M
Nominal Capacity	100 Tons	0 to 2000 Tons	T

NOTE: Table 29 continues onto the following pages.

Table 29 continued: Controller Setpoints

Description	Default	Range	PW
Leaving Water			
Cool LWT	44. 0°F	35.0 to 80.0 °F	M
Heat LWT	135. 0°F	110.0 to 135.0 °F	M
Templifier No Start	70. 0°F	30.0 to 100.0 °F	M
Templifier Reset	55. 0°F	50 to 100.0 °F	M
Startup Delta T	3.0°F	0.0 to 10.0 °F	T
Stop Delta T	3.0°F	0.0 to 3.0 °F	T
LWT Reset Type	NONE	NONE, RETURN, 4-20mA	T
Max Reset Delta T	0.0°F	0.0 to 20.0 °F	T
Start Reset Delta T	10. 0°F	0.0 to 20.0 °F	T
Timers			
Evap Recirculate	0.5 min	0.2 min to 5 min	M
Start-Start	5 min	2 to 60 min	M
Stop-Start	3 min	1 to 20 min	M
Source No Start	70 °F	50 to 99 °F	T
Pumps			
Evap Pump	Pump #1 Only	Pump #1 Only, Pump #2 Only, Auto Lead, #1 Primary, #2 Primary	M
Cond Pump	Pump #1 Only	Pump #1 Only, Pump #2 Only, Auto Lead, #1 Primary, #2 Primary	M
Cooling Tower			
Tower Control	None	None, Temperature, Lift	T
Tower Stages	1	1 to 4	T
Stage Up Time	2 min	1 to 60 min	T
Stage Down Time	5 min	1 to 60 min	T
Stage Differential (Temp)	3.0 °F	1.0 to 10.0 °F	T
Stage Differential (Lift)	6.0 psi	1.0 to 20.0 psi	T
Stage #1 On (Temp)	70 °F	40 to 120 °F	T
Stage #2 On (Temp)	75 °F	40 to 120 °F	T
Stage #3 On (Temp)	80 °F	40 to 120 °F	T
Stage #4 On (Temp)	85 °F	40 to 120 °F	T
Stage #1 On (Lift)	35 psi	10 to 130 psi	T
Stage #2 On (Lift)	45 psi	10 to 130 psi	T
Stage #3 On (Lift)	55 psi	10 to 130 psi	T
Stage #4 On (Lift)	65 psi	10 to 130 psi	T
Cooling Tower Valve / VFD			
Valve/VFD Control	None	None, Valve Setpoint, Valve Stage, VFD Stage, Valve SP/VFD Stage	T
Valve Setpoint (Temp)	65 °F	40 to 120 °F	T
Valve Setpoint (Lift)	30 psi	10 to 130 psi	T
Valve Deadband (Temp)	1.0 °F	0.0 to 10.0 °F	T
Valve Deadband (Lift)	1.0 psi	0.0 to 20.0 psi	T
Stage Down @	20%	0 to 100%	T
Stage Up @	80%	0 to 100%	T
Valve Control Range (Min)	10%	0 to 100%	T
Valve Control Range (Max)	100%	0 to 100%	T
Valve Type	NC	Normally Closed, Normally Open (To Tower)	T
Minimum Start Position	10%	0 to 100%	T
Minimum Position @	60 °F	0 to 100 °F	T
Maximum Start Position	100%	0 to 100%	T
Maximum Position @	90 °F	0 to 100 °F	T

Table 29 continued: Controller Setpoints

Description	Default	Range	PW
Bypass Valve, Step and Wait Control			
Step	6 sec	0 to 999 sec	T
Derivative	1	0 to 99	T
Gain	20	0 to 99	T
Dead Band (D-Band)	1.0	0 to 200	T
Tower Fan, PID Control			
Integral	600 sec	0 to 999 sec	T
Derivative	1 sec	0 to 999 sec	T
Proportional Gain (K)	80	0 to 999 sec	T
Dead Band (DB)	0	0 to 9.9 UOM	T
Update Period (TC)	500 ms	0 to 9999 ms	T
Additional WMC Tower Reset			
Tower Reset (Temp)	10 psi	0 to 20.0 psi	T
Tower Reset (Lift)	5.0 °F	0 to 10.0 °F	T
Sensor Selection	ECWT-B3	ECWT-B3 (provided) or EHRT-B9 (not provided)	T
Alarms			
Evaporator Freeze	34.0 °F	-9.0 to 45.0 °F	T
Condenser Freeze	34.0 °F	-9.0 to 45.0 °F	T
Low Suction pressure - Stop	25 psi	5 to 45 psi	T
Low Suction pressure - Inhibit	30 psi	7 to 45 psi	T
Low Suction pressure - Unload	29 psi	6 to 45 psi	T
High Discharge Temperature - Shutdown	190 °F	120 to 240 °F	T
High Discharge Temperature - Load	170 °F	120 to 240 °F	T
High Discharge pressure	140 psi	120 to 240 psi	T
Motor Current Threshold	5%	1 to 20%	T
Surge High Suction SH - Start	20 °F	1 to 99 °F	T
Surge High Suction SH - Run	12°F	2 to 25 °F	T
Service			
Unload Timer	120 sec	5 to 300 sec	T
Interlock Timer	10 sec	1 to 240 sec	T

Building Automation Systems (BAS)

All MicroTech® II controllers with Open Choices™ are capable of BAS communications, providing easy integration and comprehensive monitoring, control, and two-way data exchange with open standard protocols such as LonTalk®, Modbus® or BACnet®.

Daikin Applied unit controllers strictly conform to the interoperability guidelines of the LonMark® Interoperability Association and BACnet® International. They have received LonMark® certification with optional LonWorks® communication module.

Protocol Options

The following protocol options are available:

- BACnet® MS/TP
- BACnet® IP
- BACnet® Ethernet
- LonWorks®
- Modbus® RTU

The BAS communication module can be ordered with the chiller and factory-mounted or can be field-mounted at any time after the chiller unit is installed. Connection to the chiller for all BAS protocols will be at the unit controller. An interface card, depending on the protocol being used, will have been factory installed in the unit controller if so ordered, or it can be field installed.

If an interface module was ordered, the appropriate BAS interface installation manual was shipped with the unit. If necessary, contact your local Daikin Applied sales office for a replacement manual or obtain one from www.DaikinApplied.com. These documents can be easily found on the website using the “Search Literature” feature.

Use with On-Site Generators

Magnitude® Model WMC chillers have their total tonnage divided between the number of compressors on the chiller. The compressor(s) are operated with variable frequency drives and if the unit has two compressors, the compressors start sequentially. These features make Magnitude® chillers especially appropriate for use in applications where they may be required to run with on-site electrical generators. This is particularly true when the generators are used for temporary power when the utility power is lost.

Generator Sizing

Natural gas and diesel generators are sensitive to the compressor’s locked-rotor characteristics when the chillers start up. Use the electrical data supplied with the performance output sheet, obtained from the Daikin Applied sales office, for generator sizing purposes. The chiller data sheet will show the RLA, which is for each compressor. Refer to Electrical Data to determine the LRA, which is based on the RLA. It is important to size the generator to handle the LRA at startup.

⚠ WARNING

Generator must be sized by an electrical engineer familiar with generator applications.

Transfer Back to Grid Power

Proper transfer from stand-by generator power back to grid power is essential to avoid compressor damage.

⚠ WARNING

Stop the chiller before transferring supply power from the generator back to the utility power grid. Transferring power while the chiller is running can cause severe compressor damage.

The necessary procedure for reconnecting power from the generator back to the utility grid is as follows:

1. Set the generator to always run five minutes longer than the unit start-to-start timer, which can be set from two to sixty minutes. The actual setting for the start-to-start timer can be viewed on the HMI on the TIMERS Setpoint Screen (see Figure 31 on page 36).
2. Configure the transfer switch provided with the generator to automatically shut down the chiller before transfer is made. The automatic shut-off function can be accomplished through a BAS interface or with the “remote on/off” wiring connection shown in "Figure 20: Controller Box Wiring" on page 17ppage 24.

It is not necessary to shutdown the chiller if pumps are not directly controlled by the chiller. Doing so, however, provides a more coordinated restart. Please note an unsynchronized transfer switch may result in an alarm shutdown of the chiller.

A start signal can be given anytime after the stop signal since the start-to-start timer will be in effect.

Service Programs

It is important that an air conditioning system receive adequate maintenance if the full equipment life and full system benefits are to be realized. Maintenance should be an ongoing program from the time the system is initially started. A full inspection should be made after 3 to 4 weeks of normal operation on a new installation and on a regular basis thereafter.

Daikin Applied offers a variety of maintenance services through the local Daikin Applied service office and can tailor these services to suit the needs of the building owner. Most popular among these services is the Daikin Applied Comprehensive Maintenance Contract. For further information concerning the many services available, contact your local Daikin Applied service office.

Chiller Maintenance

⚠ DANGER

Use approved Lock Out / Tag Out procedures to disconnect power from the unit. Wait 20 minutes after disconnecting power from the unit before opening any compressor access covers. The DC link capacitors store enough energy to cause electrocution.

Electrical System

Maintenance of the electrical system involves the general requirement of keeping connections clean and tight. Pump interlocks and flow switches should be checked to be sure they interrupt the control circuit when tripped.

Cleaning and Preserving

A common cause of service calls and equipment malfunction is dirt. This can be prevented with normal maintenance. The system components most subject to dirt are:

1. Strainers: Remove and clean strainers in the chilled water system and condenser water system at every inspection.
2. Condenser Tubes: Inspect the condenser tubes annually for fouling and clean if required. The standard waterboxes should be removed with care due to their weight. One method for handling standard waterboxes follows (only qualified service personnel should perform these tasks):
    - After draining water, remove all but two head bolts at roughly 10 and 2 o'clock.
    - Loosen the remaining two bolts to enable the head to be separated from the tube sheet sufficiently for a clevis pin or hook to be inserted into an open bolt hole at the top of the head.
    - Attach a hoist to the pin or hook, lift the head to remove weight from the two remaining bolts, remove the bolts, and carefully remove the head.
    - Do not try to install a machine thread eyebolt into the head vent fitting, which has pipe threads.
    - Reverse this procedure to mount the head, using a new gasket.
3. Condenser Flow Sensor: The condenser sensor should be cleaned anytime the condenser is opened. This should typically be performed at the annual inspection; however, more frequent cleaning may be required depending on the conditions of the jobsite. Recommended maintenance includes the following:
    - Check the sensor tip for buildup.
    - Clean the tip using a soft cloth. Stubborn buildup — such as lime — can be removed using a common vinegar cleaning agent.

Water Treatment

Special care must be taken when utilizing open system water that is usually not treated (such as lakes, rivers, and ponds). The use of untreated water will result in corrosion, erosion, slime buildup, scaling, or algae formation. Water treatment service must be used. Special tube and water head material may be required to reduce damage from corrosion. Daikin Applied is not responsible for damage or faulty operation from untreated or improperly treated water.

Seasonal Shutdown

⚠ CAUTION

The condenser and evaporator are not self-draining. Where the chiller can be subject to freezing temperatures, the condenser and evaporator must be drained of all water. Water permitted to remain in the piping and vessels can rupture these parts if subjected to freezing temperatures. Dry air blown through the vessels will aid in forcing all water out.

Except for freezing conditions, it is desirable to leave water in the vessels to avoid long term exposure to air.

Continuous forced circulation of antifreeze through the vessels is one method of avoiding freeze up.

Seasonal Startup

Seasonal startup procedures are as follows:

1. Leak test the unit.
2. Check and tighten all electrical connections.
3. Replace the drain plugs (including cooling tower pump and tower drain) if they were removed at shutdown the previous season.

Maintenance Schedule

Table 30 provides an overview of recommended maintenance procedures along with how frequently these procedures should be performed.

Table 30: Recommended Maintenance Schedule

	Monthly	Quarterly	Semi-Annually	Annually	As Required By Performance	During Seasonal Shutdown	During Seasonal Startup
I. Compressor							
A. Analyze Compressor Fault Log		X					
B. Check IGV operation		X					
C. Check and tighten compressor electrical connections				X			
D. Perform moisture-prevention measures per compressor service manual				X			
II. MicroTech® II Controls							
A. Check for proper settings		X					
B. Verify transducers and sensors for accuracy		X					
C. Retrieve and archive HMI Trend Logs	O						
D. Perform MicroTech® II check, log, and last fault analysis		X					
III. Condenser							
A. Confirm correct water flow and pressure drop	O	X					
B. Confirm appropriate water treatment	O						
C. Clean and Leak Test condenser tubes				X	X	X	
D. Eddy Current Test - tube wall thickness					X		
E. Seasonal Protection					X		
F. Clean Flow Sensor				X	X		
IV. Evaporator							
A. Confirm correct water flow and pressure drop	O	X					
B. Confirm appropriate water treatment	O						
C. Clean and Leak Test evaporator tubes					X		
D. Eddy Current Test - tube wall thickness					X		
E. Seasonal Protection					X		
F. Clean Flow Sensor				X			
V. Chiller Unit							
A. Run Test / Performance Evaluation		X					
B. Leak Test entire unit		X				X	X
C. General Appearance:							
1. Paint / Corrosion					X		
2. Insulation					X		
VII. Electrical							
A. Check and record line voltage		X					
B. Inspect power components for signs of overheating		X					
C. Check and tighten unit electrical components				X			X

Key: O = Performed by owner personnel X = Performed by qualified service personnel

Definitions

Active Amp Limit

Active amp limit is the actual amp limit imposed by an outside signal such as the load limit function.

Active Capacity Limit

The active capacity setpoint is the setting in effect at any given moment. Any one of several external inputs can limit a compressor's capacity below its maximum value.

Active Setpoint

The active setpoint is the parameter setting in effect at any given moment. This variation can occur on setpoints that can be altered during normal operation. Resetting the chilled water leaving temperature setpoint by one of several methods such as return water temperature is an example.

Condenser Recirc (Recirculation) Timer

A timing function, with a 30-second default after start, that holds off tower fan control for the duration of the timing setting.

Dead Band

The dead band is a set of values associated with a setpoint such that a change in the variable occurring within the dead band causes no action from the controller. For example, if a temperature setpoint is 44°F and it has a dead band of ± 2.0°F, nothing will happen until the measured temperature is less than 42°F or more than 46°F.

Demand

Signal between 0 & 1000 sent from the compressor controller to the compressor. This directs where the compressor needs to be with capacity: increasing, stable, or decreasing.

Discharge Superheat

Discharge superheat is calculated using the following equation:

Discharge Superheat = Discharge Temperature – Condenser Saturated Temperature

ELWT

Evaporator leaving water temperature. The "water" is any fluid used in the chiller circuit.

ELWT Error

Error in the controller context is the difference between the value of a variable and the setpoint. For example, if the ELWT setpoint is 44°F and the actual temperature of the water at a given moment is 46°F, the ELWT error is +2 degrees.

ELWT Slope

The ELWT slope is an indication of the trend of the chilled water temperature. It is calculated by taking readings of the temperature every few seconds and subtracting them from the previous value over a rolling one-minute interval.

Error

In the context of this manual, "Error" is the difference between the actual value of a variable and the target setting or setpoint.

Evaporator/Condenser Approach

The evaporator/condenser approach is calculated for each vessel. The equations are as follows:

Evap Approach = LWT – Saturated Temperature

Cond Approach = Saturated Temperature – LWT

Evap Hold-loading

This is a setpoint that establishes the minimum evaporator pressure to which the chiller is allowed to go. It signals that the unit is at full load so the no further loading will occur that would lower the pressure even further.

Evap Recirc (Evaporation Recirculation) Timer

A timing function, with a 30-second default, that holds off any reading of chilled water for the duration of the timing setting. This delay allows the chilled water sensors to take a more accurate reading of the chilled water temperature.

EXV

Electronic expansion valve, used to control the flow of refrigerant to the evaporator, controlled by the unit microprocessor.

Lenient Flow Logic

This option affords the chiller the maximum tolerance to intermittent water flow loss detection, and reduces nuisance chiller trips. Momentary loss of flow detection can be a result of valve changes in the primary loop, as when staging another chiller, or sudden changes in water temperature around the flow sensor. Variable speed pumps operating at minimum flow rates can exacerbate these flow issues.

Enabled, this logic detects a loss of flow signal (>5 Sec) in either the condenser or evaporator and sets an internal logic flag. Chiller operation is allowed to continue as long as the vessel pressures and surge detection remain valid. If condenser flow is lost and the pressure rises to within 5psi of the condenser pressure trip point the chiller will shut down on condenser flow loss alarm. If evaporator flow is lost and the evap pressure drops to the EP-Unload set point the chiller will shut down on evaporator flow loss alarm. If either flow signal is lost and the surge logic is tripped, the chiller will shut down and generate a flow loss alarm for whichever flow was missing.

The default setting for Lenient Flow logic in the WMC code is On. Turning it off converts the flow loss alarms, to timer based.

Evap flow loss is adjustable from 12 down to 3s (default 12s), and the condenser flow loss is adjustable from 20 to 3s (default 20s).

Load Balance

Load balance is a technique that equally distributes the total unit load between two or more running compressors.

Load Limit

An external signal from the keypad, the BAS, or a 4-20 ma signal that limits the compressor loading to a designated percent of full load. Used to limit unit power input.

Low Pressure Hold (Inhibit) Setpoint

The psi evaporator pressure setting at which the controller will not allow further compressor loading. “Hold” and “Inhibit” are used interchangeably.

Low Pressure Unload Setpoint

The psi evaporator pressure setting at which the controller will unload the compressor in an effort to maintain the minimum setting.

LRA

Locked rotor amps.

Minimum and Maximum Compressor Speeds

The (respective) Surge and Choke speeds, determined by the compressor software, are based on suction and discharge pressures.

Offset

Offset is the difference between the actual value of a variable (such as temperature or pressure) and the reading shown on the microprocessor as a result of the sensor signal.

HMI

Machine Interface Touch Screen, one screen per unit provides operating data visually and accommodates setpoint entry.

Part Load Balance Valves

These valves open before compressor start, to allow gas flow through the compressor, which stabilizes the impeller as it ramps up in speed.

pLAN

Pico Local Area Network is the proprietary name of the network connecting the control elements.

RapidRestore® Function

This logic has been introduced to reduce the time the chiller needs to recover from a power loss event. The chiller’s run status is continuously stored in battery backed RAM. When power is returned to the compressors it checks the status of this function, and if enabled it then checks if the chiller was running when power was lost. If so, it clears timers, enables the pumps, and clears power loss alarms. Evaporator water flow must be detected before the compressor is allowed to start, the re-circulation timer will be cleared. As the compressors start in quick session the maximum pull down rate is relaxed to promote a fast return to set point. The function ends when the ELWT has dropped below the Stage-Delta temperature, or a compressor shuts down (for any reason).

If other alarms are pending (such as a bearing fault) the RapidRestore® function will be canceled.

Refrigerant Saturated Temperature

Refrigerant saturated temperature is calculated from the pressure sensor readings. The pressure is fitted to an HFC-134a temperature/pressure curve to determine the saturated temperature.

RLA

Run load amps.

SP

Setpoint

Stageup Delay

The time delay from the start of the first compressor to the start of the second.

Stageup/Stagedown Delta-T

Staging is the act of starting or stopping a compressor or fan when another is still operating. Startup and Stop is the act of starting the first compressor or fan and stopping the last compressor or fan. The Delta-T is the “dead band” on either side the setpoint in which no action is taken.

Startup Delta-T

Number of degrees above the LWT setpoint required to start the first compressor.

Stop Delta-T

Number of degrees below the LWT setpoint required for the last compressor to stop.

Suction Superheat

Suction superheat is calculated for each compressor using the following equation:

Suction Superheat = Suction Temperature – Evaporator Saturated Temperature

VDC

Volts, Direct Current; sometimes noted as vdc.

VFD

Variable Frequency Drive, a device located on the compressor used to vary the compressor speed.

DAIKIN APPLIED AMERICAS INC.
LIMITED PRODUCT WARRANTY
(North America)

Daikin Applied Americas Inc. dba Daikin Applied ("Company") warrants to contractor, purchaser and any owner of the product (collectively "Owner") that Company, at it's option, will repair or replace defective parts in the event any product manufactured by Company, including products sold under the brand name Daikin and used in the United States or Canada, proves defective in material or workmanship within twelve (12) months from initial startup or eighteen (18) months from the date shipped by Company, whichever occurs first. Authorized replaced parts are warranted for the duration of the original warranty. All shipments of such parts will be made FOB factory, freight prepaid and allowed. Company reserves the right to select carrier and method of shipment.

In addition, labor to repair or replace warranty parts is provided during Company normal working hours on products with rotary screw compressors and centrifugal compressors. Warranty labor is not provided for any other products.

Company's liability to Owner under this warranty shall not exceed the lesser of the cost of correcting defects in the products sold or the original purchase price of the products.

PRODUCT STARTUP ON CENTRIFUGAL AND SCREW COMPRESSOR PRODUCTS IS MANDATORY and must be performed by a Daikin Applied or a Company authorized service representative.

It is Owner's responsibility to complete and return the Registration and Startup Forms accompanying the product to Company within ten (10) days of original startup. If this is not done, the ship date and the startup date will be deemed the same for warranty period determination, and this warranty shall expire twelve (12) months from that date.

EXCEPTIONS

1. If free warranty labor is available as set forth above, such free labor does not include diagnostic visits, inspections, travel time and related expenses, or unusual access time or costs required by product location.
2. Refrigerants, fluids, oils and expendable items such as filters are not covered by this warranty.
3. This warranty shall not apply to products or parts which (a) have been opened, disassembled, repaired, or altered by anyone other than Company or its authorized service representative; or (b) have been subjected to misuse, negligence, accidents, damage, or abnormal use or service; or (c) have been operated, installed, or startup has been provided in a manner contrary to Company's printed instructions, or (d) were manufactured or furnished by others and which are not an integral part of a product manufactured by Company; (e) have been exposed to contaminates, or corrosive agents, chemicals, or minerals, from the water supply source, or (f) have not been fully paid for by Owner.

ASSISTANCE

To obtain assistance or information regarding this warranty, please contact your local sales representative or a Daikin Applied office.

SOLE REMEDY

THIS WARRANTY CONSTITUTES THE OWNER'S SOLE REMEDY. IT IS GIVEN IN LIEU OF ALL OTHER WARRANTIES. THERE IS NO IMPLIED WARRANTY OF MERCHANTABILITY OR FITNESS FOR A PARTICULAR PURPOSE. IN NO EVENT AND UNDER NO CIRCUMSTANCE SHALL COMPANY BE LIABLE FOR INCIDENTAL, INDIRECT, SPECIAL, CONTINGENT OR CONSEQUENTIAL DAMAGES, WHETHER THE THEORY BE BREACH OF THIS OR ANY OTHER WARRANTY, NEGLIGENCE OR STRICT LIABILITY IN TORT.

No person (including any agent, sales representative, dealer or distributor) has the authority to expand the Company's obligation beyond the terms of this express warranty or to state that the performance of the product is other than that published by Company.

For additional consideration, Company will provide an extended warranty(ies) on certain products or components thereof. The terms of the extended warranty(ies) are shown on a separate extended warranty statement.

Form No. 933-430285Y-01-A (05/17)

Daikin Applied Training and Development

Now that you have made an investment in modern, efficient Daikin Applied equipment, its care should be a high priority. For training information on all Daikin Applied HVAC products, please visit us at www.DaikinApplied.com and click on Training, or call 540-248-9646 and ask for the Training Department.

Warranty

All Daikin Applied equipment is sold pursuant to its standard terms and conditions of sale, including Limited Product Warranty. Consult your local Daikin Applied representative for warranty details. To find your local Daikin Applied representative, go to www.DaikinApplied.com.

Aftermarket Services

To find your local parts office, visit www.DaikinApplied.com or call 800-37PARTS (800-377-2787). To find your local service office, visit www.DaikinApplied.com or call 800-432-1342.

This document contains the most current product information as of this printing. For the most up-to-date product information, please go to www.DaikinApplied.com.

Products manufactured in an ISO Certified Facility.

©2018 Daikin Applied | (800) 432–1342 | www.DaikinApplied.com